DOE/NV/11718--181-VOL.1

REVISION 1
SEPTEMBER 2002

FRMAC Monitoring and Analysis Manual
Radiation Monitoring and Sampling
Volume 1

Original Signed by Carson A. Riland

Carson A. Riland, Chairman
Monitoring and Sampling Working Group
Remote Sensing Laboratory, Bechtel Nevada

Original Signed by Colleen T. O'Laughlin

Colleen T. O'Laughlin
Program Manager
CM/FRMAC Program
National Nuclear Security Administration

Original Signed by Donald M. Daigler

Donald M. Daigler
Director Emergency Management Division
National Nuclear Security Administration

Original Signed by Deborah Wilber

Deborah Wilber
National Response Program Manager
Office of Emergency Response

Original Signed by David P. Colton

David P. Colton
Authorized Derivative Classifier

This work was supported by the U.S. Department of Energy, National Nuclear Security Administration Nevada Operations Office, under Contract No. DE-AC08-96NV11718.

Approved for Public Release; Further Dissemination Unlimited

PREFACE

Under the Federal Radiological Emergency Response Plan (FRERP), the federal agencies with statutory responsibilities for dealing with radioactive materials emergencies have agreed to coordinate their emergency response efforts. In the event of a potential or existing major radiological incident, the U.S. Department of Energy's National Nuclear Security Administration Nevada Operations Office (NNSA/NV) has been charged with establishing and operating the Federal Radiological Monitoring and Assessment Center (FRMAC). The FRMAC provides coordinated federal assistance in the offfsite areas to the impacted state(s) and the lead federal agency responsible for regulation and/or operation of the accident site.

The Monitoring Division (MD) of the FRMAC is responsible for a significant portion of the assistance provided. These responsibilities include field radiation monitoring and environmental sampling. The MD coordinates the efforts of all federal, state, and local or tribal agency staffs working with the FRMAC to provide scientifically defensible data of acceptable quality.

This manual was written for those personnel who will be called upon to provide technical data, input, and decisions.

The NNSA/NV has responsibility for maintaining the master of all FRMAC manuals. Please provide comments on this manual to:

U.S. Department of Energy
National Nuclear Security Administration
Nevada Operations Office
Attn: FRMAC Program Manager
P.O. Box 98518
Las Vegas, Nevada 89193-8518

This page intentionally left blank

ACKNOWLEDGEMENTS

The FRMAC Monitoring Working Group and several additional individuals contributed their time and efforts in writing and/or reviewing this document. These individuals are recognized below.

FRMAC Monitoring Working Group

Chair, Rich Tighe	Bechtel Nevada
Robert Bores	U.S. Nuclear Regulatory Commission
Brooke Buddemeier	Lawrence Livermore National Laboratory
Gary Chilton	Bechtel Nevada
Steve Curtis	U.S. Department of Energy
Gregg Dempsey	U.S. Environmental Protection Agency
John Fill	U.S. Department of Health and Human Services
Ron Graham	U.S. Department of Agriculture
E. Kent Gray	Center for Disease Control
C. E. Maples	Lockheed Martin Energy Systems
Colleen O'Laughlin	U.S. Department of Energy
Colleen Petullo	U.S. Environmental Protection Agency
Sam Poppell	U.S. Environmental Protection Agency
John Taschner	Los Alamos National Laboratory
George Weaver	Westinghouse Savannah River Site

Additional Contributors

Angela L. Keebler-O'Riley	Argonne National Laboratory
Joe Keller	Idaho National Engineering and Environmental Laboratory
G. Jerry Martin	Formerly U.S. Environmental Protection Agency
Anita A. Mullen	Formerly U.S. Environmental Protection Agency
Omer W. Mullen	Formerly U.S. Environmental Protection Agency
Kent Pohl	Formerly U.S. Environmental Protection Agency
Wayne Scoggins	Los Alamos National Laboratory
Lori Thomas	U.S. Department of Agriculture
Daryl J. Thome	Formerly U.S. Environmental Protection Agency

This page intentionally left blank

CONTENTS

Preface iii

Acknowledgements v

Contents vii

Acronyms xi

Units of Measure xiii

1.0 Introduction 1

1.1 Additional FRMAC Reference Work 2

1.2 Purpose 2

2.0 Guidance and Orientation for Field Personnel 5

2.1 Public Affairs 5

2.2 Safety 5

2.3 General Instructions 6

3.0 Field Monitoring 7

3.1 Team Instructions 7

3.2 Instrument Quality Control Source Checks 8

3.2.1 Preoperational Quality Control Check 8

3.2.2 Quality Control Check 9

3.2.3 Operational Check 9

3.3 Airborne Plume Surveys 9

3.4 Ground Deposition Monitoring 10

3.4.1 Survey Uses 10

3.4.2 Procedure 10

3.4.3 Beta/Gamma-emitting Radioactive Material 10

3.4.4 Alpha-emitting Radioactive Material 11

4.0 Environmental Dosimetry 13

4.1 Special Equipment 13

4.2 Deployment 13

4.3 Retrieval 14

4.4 Storage 15

5.0 Field Sampling 17
5.1 General Guidance 17
5.2 Equipment and Supplies 17
5.3 Duplicate Samples 17
5.4 Air Samples 18
5.4.1 General Precautions 18
5.4.2 High-Volume Air Samples 18
5.4.3 Low-Volume Air Samples 20
5.5 Water Samples 22
5.5.1 General Guidance 22
5.5.2 Shallow Well Water 22
5.5.3 Surface Water 23
5.5.4 Public Drinking Water 26
5.6 Soil Samples 27
5.6.1 General Guidance 27
5.6.2 Ground Deposition 28
5.6.3 Wet Soil 29
5.6.4 Dry Soil 29
5.6.5 Sandy Soil 29
5.6.6 Soil with Vegetation 29
5.6.7 Sediment 31
5.7 Human Food Samples 32
5.7.1 General Guidance 32
5.7.2 Vegetation/Fruit 33
5.8 Milk Samples 33
5.8.1 General Guidance 34
5.8.2 Commercial Dairies 34
5.8.3 Small Farms 35
5.9 Animal Feed Samples 36
5.9.1 General Guidance 36
5.9.2 Leafy Animal Feed 38
5.9.3 Hay Bale 38

6.0 Sample Packaging and Labeling 39
6.1 Labels and Seals 39
6.1.1 Alert Labels 39
6.1.2 Security Seals 39
6.2 Packaging and Labeling 41
6.2.1 Precautions 41
6.2.2 Procedure 41
7.0 Sample Control 43
7.1 Chain-of-Custody 43
7.2 Sample Receiving Line 44
7.3 Contamination Control Line 45
8.0 Equipment Contamination Surveys 47
8.1 Direct Method of Surface Monitoring 47
8.2 Indirect (Smear) Method of Surface Monitoring 48
9.0 Portable Survey Instrumentation 49
9.1 Global Positioning System 49
9.2 Geiger-Mueller Detectors 49
9.3 Other Instrumentation 49
9.4 FIDLER-Based Instruments 49
9.4.1 FIDLER Measurements 49
9.4.2 Instrument Selection 50
9.5 Calibration Records 50
9.6 Post-Calibration Performance Test 50
10.0 FRMAC Standard Units 51
10.1 Radiological Units 51
10.2 Units of Measure 51
10.2.1 Time 52
10.2.2 Date 52
10.3 Meteorology 52
10.4 Map Orientation 52
10.5 Location 52
10.6 GPS Units 52

Glossary 53

References 65

Appendix A Forms and Checklists 67

Daily Instrument QC Checks 68
Data Acquisition Log 70
Field Monitoring Log 72
Sample Control Form 74
Team, Instrument, & Equipment Information Log 76
Local Area Monitoring (LAM) TLDs 78

Appendix B Implementing and Operating FRMAC Radio Net Control 81

FIGURES

1 Organization of the FRMAC Monitoring Division 3

2 Soil Sampling Frame 30

3 Alert Labels and Security Seal 40

ACRONYMS

AD	Assessment Division
ALARA	As Low As Reasonably Achievable
ARAC	Atmospheric Release Advisory Capability
DoD	U.S. Department of Defense
DOE	U.S. Department of Energy
DOE/NV	U.S. Department of Energy, Nevada Operations Office
EOC	Emergency Operations Center, DOE
EOF	Emergency Operations Facility, Licensee
EPA	U.S. Environmental Protection Agency
EPR	Electron Paramagnetic Resonance
EPZ	Emergency Planning Zone:
FIDLER	Field Instrument for Detecting Low Energy Radiation
FRERP	Federal Radiological Emergency Response Plan
FRMAC	Federal Radiological Monitoring and Assessment Center
GM	Geiger-Mueller
GPS	Global Positioning System
H&S	Health and Safety
ICRP	International Commission on Radiological Protection
ID	Identification
LAM	Local Area Monitor
LFA	Lead Federal Agency
LLD	Lower Limit of Detection
MD	Monitoring Division
MDA	Minimum Detectable Activity
MSL	Mean Sea Level
NCRP	National Council on Radiation Protection
NNSA	U.S. DOE National Nuclear Security Administration
NRC	U.S. Nuclear Regulatory Commission

OSL	Optically Stimulated Luminescence
PAG	Protective Action Guide
PIO	Public Information Officer
QA	Quality Assurance
QC	Quality Control
SOP	Standard Operating Procedure
SRL	Sample Receiving Line
TL	Thermoluminescence
TLD	Thermoluminescent Dosimeter

UNITS OF MEASURE

Bq	Becquerel
cfm	cubic feet/minute
Ci	curie
cm	centimeter
cpm	counts/minute
cps	counts/second
dpm	disintegrations/minute
g	gram
Gy	Gray
keV	kiloelectron volt
kg	kilogram
lb	pound
MeV	megaelectron volt
mph	miles per hour
psi	pounds/square inch
R	Roentgen
rad	radiological absorbed dose
rem	Roentgen equivalent, man
Sv	sievert

This page intentionally left blank

1.0 INTRODUCTION

Under the Federal Radiological Emergency Response Plan (FRERP), the several federal agencies with statutory responsibilities for dealing with radioactive materials emergencies have agreed to coordinate their emergency response efforts. In the event of a potential or existing major radiological incident, the U.S. Department of Energy's National Nuclear Security Administration Nevada Operations Office (NNSA/NV) has been charged with establishing and operating the Federal Radiological Monitoring and Assessment Center (FRMAC). The FRMAC provides coordinated federal assistance in the offsite areas to the impacted state(s) and the Lead Federal Agency (LFA) responsible for regulation and/or operation of the emergency site. Some of the emergency scenarios that could lead to a FRMAC are:

- Atmospheric reentry of space nuclear power sources.
- U.S. Department of Energy (DOE) and U.S. Department of Defense (DoD) emergencies.
- Fuel fabrication and conversion facility emergencies.
- Lost/abandoned sources and contamination from recycled metals.
- Nuclear power reactor emergencies.
- Nuclear terrorism.
- Nuclear weapon emergencies.
- Radiopharmaceutical emergencies.
- Transportation emergencies.

The Monitoring Division (MD) of the FRMAC is responsible for a significant portion of the assistance provided. These responsibilities include field radiation monitoring, environmental sampling, and radioanalysis. The MD coordinates the efforts of all federal, state, and local or tribal agency staffs working with the FRMAC to provide scientifically defensible data of acceptable quality.

When the FRMAC responds to a radiological emergency, monitoring and sampling support will arrive from a number of different sources. The respondents providing this support will have received varying levels of training and have experience with an assortment of monitoring and sampling equipment and procedures. However, the MD requires that the methods used during the FRMAC response be uniform and consistent to ensure that the derived data are reliable and defensible. It is therefore important that standard operating procedures (SOPs) be followed by all respondents for any monitoring and sampling activities conducted under the direction of the MD.

1.1 ADDITIONAL FRMAC REFERENCE WORK

Information contained in FRMAC manuals (cited below) may be valuable for reference purposes during an emergency. These manuals are available to the public on the NNSA/NV Website:

http://www.nv.doe.gov/programs/frmac/default.htm

FRMAC Assessment Manual, Volumes 1 and 2. Provides methods to easily relate field data to the potential for exceeding early health effects thresholds, protective action guides (PAGs), and Emergency Worker Limits. The manual also provides methods to estimate dose.

FRMAC Radiological Emergency Response Health and Safety Manual. Provides guidance for radiation safety, industrial hygiene, occupational safety, and emergency medical care. The manual includes information on Radiation Exposure Guidelines, personnel dosimetry, contamination control (including limits on contamination for release of equipment to uncontrolled areas), radioactive and hazardous waste packaging, and personal protective equipment.

FRMAC Monitoring and Analysis Manual, Sample Preparation and Analysis, Volume 2. Provides guidance for radiochemical analysis of samples collected during a radiological emergency to provide scientifically defensible data of acceptable quality.

FRMAC Operations Plan, Emergency Phase. Provides an overview of the operations and functions of the FRMAC so that each participant can understand the individual tasks and their interface with the overall mission. The internal working operations are described from initial notification and the collection of data to the final distribution of data to the states(s) and the LFA.

1.2 PURPOSE

This manual provides SOPs for field radiation monitoring and sample collection for use by the MD during a FRMAC response to a radiological emergency. Figure 1 shows the organization of the FRMAC MD. Complete FRMAC organization charts are available in the *FRMAC Operations Plan*.

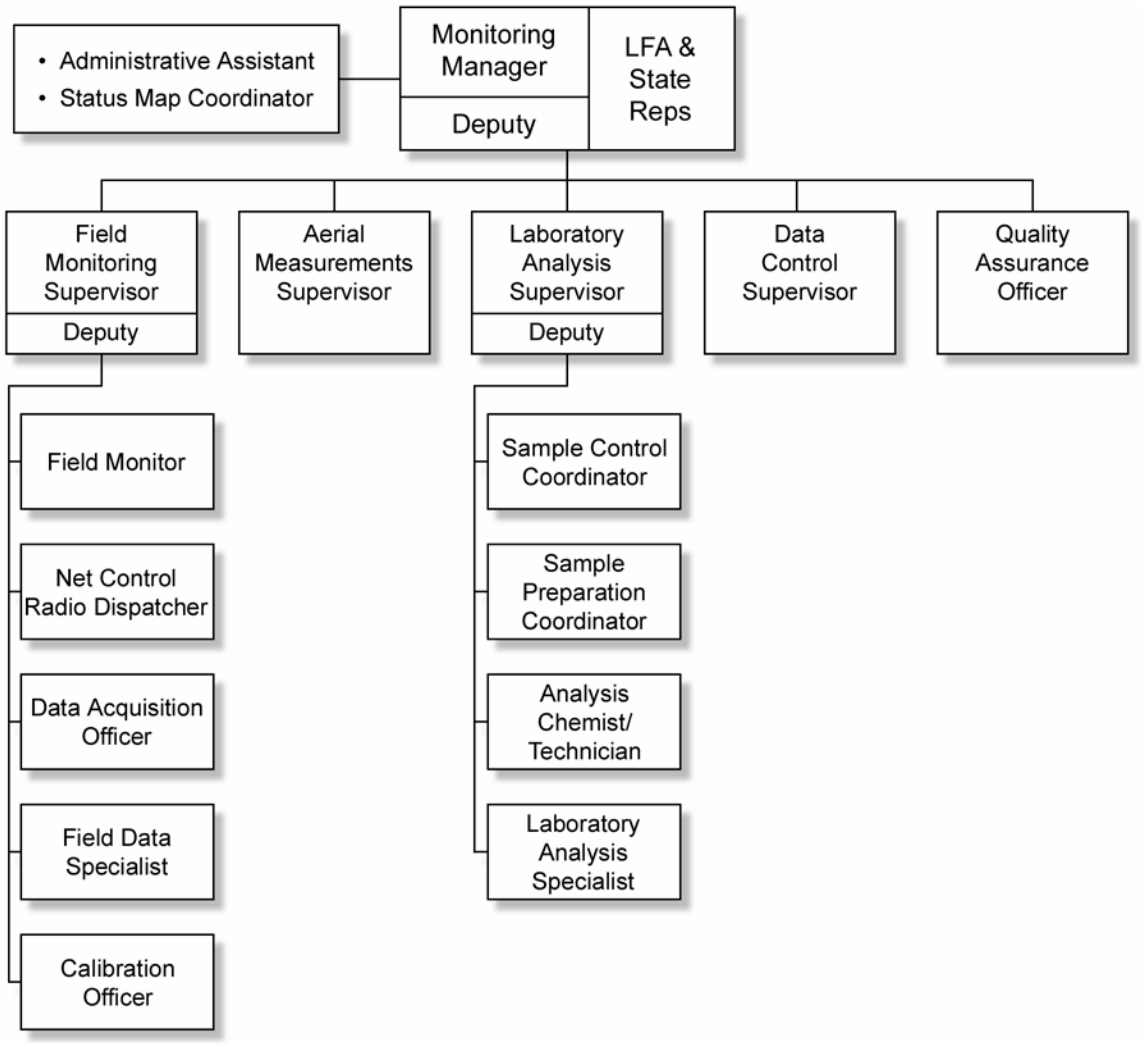

FIGURE 1. ***ORGANIZATION OF THE FRMAC MONITORING DIVISION***

This page intentionally left blank

2.0 GUIDANCE AND ORIENTATION FOR FIELD PERSONNEL

2.1 PUBLIC AFFAIRS

Persons responsible for dissemination of public information must be committed to honesty and integrity. The embarrassment in the candid admission of an error is small compared to that which results if an attempted evasion is discovered. The public has a right to know the facts, and the media has a legitimate interest in telling the public about these facts. The truth about a radiation emergency is almost certain to be less alarming than the exaggerated ideas that will circulate.

The FRMAC Director should ensure that FRMAC personnel are briefed on public affairs policy. Through an internal information program, security personnel, health/medical personnel, Field Monitoring Teams, and others who may come in contact with the general public will be provided specific guidance on responding to queries about the accident and response operations.

Field Teams:

- May not provide data to the public.
- May provide phone numbers for the Public Information Officer (PIO).
- May explain what they are doing and why.

2.2 SAFETY

The Field Monitoring Supervisor will:

- Ensure that the Field Monitoring Teams are in a state of readiness and dispatch them from the FRMAC.
- Designate the type of equipment needed and discuss anti-contamination requirements with team members before they leave the FRMAC.

Health and Safety (H&S) will provide information to the Field Monitoring Supervisor for implementing the use of thyroid-blocking drugs, protective clothing, respirators, or other radiological protective equipment.

Team Members will be aware of administrative control levels, turn-back levels, and accepted organization limits for emergency workers as established by the H&S Division:

- As a team member, you are responsible for your own safety. No sample is worth the loss of life or limb. Field sample collection can be dangerous. Always be aware of the hazards that you may encounter in the field and take the necessary precautions. Never attempt any field activities without the appropriate equipment.

- You may generate waste material in collecting a sample. Place all waste items such as disposable gloves, tape, absorbent towels, etc., in a separate plastic bag and label it "waste." Turn the bag in at the Contamination Control Line.
- Teams may need to collect field samples and then move, after consulting Net Control, to a low background area away from the plume in order to estimate sample activity.
- Teams should make all reasonable efforts to comply with turn-back guidance.

2.3 GENERAL INSTRUCTIONS

- All monitoring and sampling activities shall be conducted so that exposures are maintained as low as reasonably achievable (ALARA).
- Teams are under the direction of the Field Monitoring Supervisor, who will provide direction and the location for collection of environmental and food samples.
- Teams will, to the best of their ability, identify, record, and transmit all field information in a precise and timely manner.
- Teams will document all sampling and measurement activities on the appropriate forms and report to Net Control, as directed.
- If possible, teams will determine in advance if special access or special hazards may be encountered at the time of sample collection. They will obtain access permission from landowners or their agents, or from federal or local government jurisdictions. If assistance is required, they will make arrangements prior to entering a property.

3.0 FIELD MONITORING

Following a radionuclide release, Field Monitoring Teams use portable instruments to rapidly locate contamination and measure the level of radioactivity. Immediate results are then radioed to managers who implement precautionary actions to protect the responders. Additionally as instructed, teams collect environmental samples such as water and soil for definitive radioanalyses to confirm initial measurements.

3.1 TEAM INSTRUCTIONS

Each team should be comprised of at least two members (three members are preferable). One member should be designated Field Team Leader. Each team will:

1. Receive initial briefing and initial assignments from the Field Monitoring Supervisor and H&S representative. During this briefing, ensure Field Monitoring Teams obtain:
   - Locations of available decontamination/hotline facilities.
   - Turn-back levels.
   - Plume and/or deposition maps or information.
2. Obtain appropriate equipment and information. Refer to Appendix A for sample forms.
   - Obtain the telephone number of Net Control in case radio contact is lost.
   - Obtain telephone number of PIO.
3. Obtain a pocket dosimeter and/or self-reading dosimeter from H&S, if required.
   - Record initial dosimeter reading on a *Field Monitoring Log* before departing for the field.
   - Check dosimeter reading every hour during exposure or as requested by the Field Monitoring Supervisor and record data on a *Field Monitoring Log*.
4. Perform quality control (QC) checks on survey instruments, including battery check at the beginning and end of each shift.
5. Complete a *Team, Instrument, & Equipment Information* form and submit the form to the Field Monitoring Supervisor before departing for field.
6. Bag instruments if instructed by the Field Monitoring Supervisor or as required for surveys in contaminated areas.
   - Take background reading with each survey instrument and initial readings with global positioning system (GPS) device and record on a *Field Monitoring Log*.
7. Don protective clothing and respiratory equipment, if necessary, as instructed by the Field Monitoring Supervisor and H&S.

8. Conduct radio check when leaving FRMAC.
    - Call in background readings from appropriate survey instruments and GPS coordinates, and then maintain radio communication with Net Control, which logs all radio calls, incoming and outgoing, with time and actual message (see Appendix B).
9. Proceed to designated monitoring area, as directed by the Field Monitoring Supervisor. The Field Monitoring Supervisor receives meteorological and dose assessment information and provides updated information, as necessary.
10. Use most sensitive instrument to provide first indication of encountering radiation from plume or contaminated area.
11. If ground level plume boundary (as directed by MD) is reached, notify Net Control of location and readings.
    - Conduct further plume traverse/tracking only as directed by Net Control.
    - During plume/deposition transit time, close all vehicle windows and vents and either use the recirculation switch on the heat / air conditioning system or shut off the heat / air conditioning system as directed.
12. Upon arrival at monitoring location, conduct requested surveys and sampling and then report these results to Net Control.

On return to FRMAC, each field team leader reports to the Field Monitoring Supervisor controlling the team. The Field Team Leaders are to turn in the team's *Field Monitoring Logs* and be debriefed by the Field Monitoring Supervisor and a member of the Assessment Division (AD).

3.2 INSTRUMENT QUALITY CONTROL SOURCE CHECKS

Monitoring and Sampling teams perform certain steps prior to being dispatched from the FRMAC. If a team is dispatched directly to the field in relief of another team, these steps should be performed as soon as is reasonably convenient, such as during shift change.

3.2.1 Preoperational Quality Control Check

1. Check instrument for:

   Unusual or unexpected response or behavior.
   Physical damage.
2. Check batteries.

   Spare batteries are located in emergency response kits and can be obtained from the Instrument Calibration and Maintenance Officer, Logistics, or H&S personnel.
3. Zero instruments having manual electronic ZERO function.
4. Set instrument to lowest range that provides an on-scale reading.

3.2.2 Quality Control Check

Instructions are available from the instrument calibration area, the Instrument Calibration and Maintenance Office, or the H&S Division of FRMAC. A portable calibration capability is available for field deployment as required.

1. Ensure the calibration certificate has not expired.
2. Check the battery.
3. Look for normal background response.
4. Check each instrument at the beginning and end of each shift.
5. Perform instrument source checks if sources are available. Ensure reading is within the acceptable range.

3.2.3 Operational Check

In addition to the above, complete the following when check sources are available:

1. Use appropriate check source for type of radiation for which instrument is designed and will be used to detect.
2. Perform check in predetermined geometry to give defined exposure or count rate.
3. Perform preceding step on each scale calibrated for use.
4. Complete a *Daily Instrument QC Checks* form and give the form to the Calibration Officer or the Field Monitoring Supervisor.

Operational checks of radiation survey instruments should be performed periodically and after doing any minor maintenance such as changing batteries or fixing a loose cable.

3.3 AIRBORNE PLUME SURVEYS

CAUTION

A gamma exposure rate of 1.5 Roentgen per hour (R/hr) is the turn-back level, unless otherwise directed. Pull back to an area of lower level and notify Net Control if turn-back level is reached. Minimize operations in a high radiation field, which is an area with readings in excess of 100 milliRoentgen per hour (mR/hr).

A plume boundary is routinely defined as 5 times background level. The center line location and radiation levels are of particular interest to the Monitoring and Assessment personnel. This information helps to better identify the plume direction and source term of the release.

Note: Although a “plume” typically refers to an active airborne release, it may be used to reference the pattern in which materials are deposited on the ground.

3.3.1 Procedure

1. Use an instrument appropriate for the radionuclide(s) being tracked.
   - Wrap the instrument(s) in plastic cling wrap to prevent contamination. The active area of the detectors should not be covered.
2. Begin on lowest scale, switching to higher scales as necessary.
3. Perform radiological surveys in two ways: at waist level and at about 2.5 centimeters (cm) (1 inch).
4. Periodically check dosimeters and notify Net Control if readings exceed administrative control levels.

3.4 GROUND DEPOSITION MONITORING

3.4.1 Survey Uses

After plume passage, area surveys are performed to determine radiation levels from materials deposited. Surveys are used to identify:

1. Appropriate locations for samples.
2. Boundaries within which exposure rates and/or contamination levels exceed derived levels for relocation and remediation.

3.4.2 Procedure

The number of samples, turnback levels, and survey points vary depending upon changing scenarios and will be determined on a case-by-case basis.

General precautions:

- Ground deposition measurements should be made in undisturbed, relatively level, open areas away from vehicles, buildings, roads, heavy traffic areas (paths), excavated areas, and piled rocks, gravel, or soil.
- Be careful not to puncture the thin windows on instruments and/or contaminate the probe/detectors.
- Record all data on a *Field Monitoring Log*; report all results to Net Control as instructed.
- Take measurements at additional locations as directed by Net Control.

3.4.3 Beta/Gamma-emitting Radioactive Material

This group includes reactor accident fission products such as cobalt-60, cesium-137, uranium, thorium, and many radiopharmaceuticals.

3.4.3.1 Procedure

1. Take measurements during travel along roadways in and around the contaminated area
2. Make initial gamma measurements from inside a slowly moving vehicle with the vehicle windows closed.
3. Hold the detector at lap height.
4. Start with the meter on the lowest range.
5. Record the location where:
   - Exposure rate is five times background (unless otherwise directed by the Monitoring Division).
   - 1 mR/hr increases up to10 mR/hr.
   - Highest exposure rate is obtained.
6. With each exposure rate instrument, make measurements at waist level and 2.5 cm (1 inch) from the ground at each designated location, unless directed otherwise.
   - Use a pancake Geiger-Mueller (GM) detector with the uncovered thin window pointing down, measuring in counts per minute (cpm).
   - Using an exposure rate instrument, make measurements starting at the plume boundary value. To determine plume or deposition boundaries, work outward to area where gamma exposure rates appear to be at normal background levels.
   - Make measurements in support of food and pasture restrictions about 15 meters (50 feet) off roadway, if possible.

3.4.4 Alpha-emitting Radioactive Material

Alpha-emitting radioactive materials include plutonium, americium, and other actinides.

CAUTION

Never “wrap” an alpha probe with plastic. Alpha radiation cannot be measured through plastic.

3.4.4.1 Alpha Contamination Meter

Alpha radiation has very short range. A zinc sulfide scintillator or proportional counter is used as the measuring device.

1. Choose a surface that is relatively flat. A cloth or paper large-area wipe can be surveyed with a portable instrument to test for contamination on irregular surfaces.
2. Take measurements as close as possible to the surface using caution not to puncture the probe.

Note: Any dew or snow overburden on the contamination may reduce or block the alpha radiation. Because of geometry and environmental factors, alpha contamination survey meters are useful for identifying but are not optimal for quantifying alpha contamination.

3.4.4.2 X-ray/Low-Energy Gamma Detector

X-rays are released during alpha decay. Some actinides (like plutonium and americium-241) also release low-energy gamma rays. The preferred measurement to quantify ground contamination uses a Field Instrument for Detecting Low Energy Radiation (FIDLER)-type instrument to measure the photons, which are not affected by geometry or overburden.

- Take measurements with the detector about 30 cm (1 foot) above the ground. Where possible, measurements should be made at least 15 meters (50 feet) off the roadway.
- Bring standard alpha contamination meters to help identify survey locations and check for personnel and equipment contamination.

4.0 ENVIRONMENTAL DOSIMETRY

Where external exposure is a consideration, environmental dosimetry is used to measure environmental radiation levels. Placement of environmental dosimeters in and around a suspected plume deposition area is recommended.

4.1 SPECIAL EQUIPMENT

Use the following equipment as necessary or as directed.

- Dosimeters (TLDs)
- Hammer (large)/Tool for driving stake or post
- Shielded box
- Sealable plastic bags
- Stakes or metal fence posts
- Tape
- Desiccant
- Tie wraps
- *Local Area Monitoring (LAM) TLDs* form

4.2 DEPLOYMENT

When a Monitoring and Sampling team member receives environmental dosimeters, that team member assumes responsibility for their safe handling during transport and for their return if not used.

CAUTION
Do not expose environmental dosimeters to radiation sources during transport.

1. Obtain environmental dosimeters from designated official.
2. Use transit controls for deployment and retrieval of dosimeters.
3. During transport, store package of environmental dosimeters in a place where they are least likely to be damaged or exposed to radiation or heat, such as in a shielded box.

4. Place two environmental dosimeters in a sealable plastic bag. Seal bag firmly and secure bag to post or structure 1 meter (3 feet) from the ground, facing the center of the plume footprint or source.
5. Complete *Local Area Monitoring (LAM) TLD* forms for each environmental dosimeter station. A TLD is a thermoluminescent dosimeter.
   - Include precise directions to each environmental station location so environmental dosimeters can be recovered.
   - Mark the location with flagging or ribbon that is clearly visible from the road.
   - Take and record GPS readings.
   - Note deployment of each environmental dosimeter on a *Field Monitoring Log*.
   - Record TLD numbers on the *Local Area Monitoring (LAM) TLDs* form and dosimeter package.
   - Take GM readings and record GM survey results in the Remarks section.
6. Return transit controls and *Local Area Monitoring (LAM) TLDs* forms to Sample Control.

4.3 RETRIEVAL

1. Retrieve all environmental dosimeters that were deployed.
   - Be sure to carry transit controls to determine transit exposure.
2. Survey environmental dosimeters and/or containers for contamination with a GM pancake instrument prior to removal from the field.
3. If contaminated, transfer each set of environmental dosimeters from the contaminated packages to a clean, appropriately sized, sealable plastic bag or other protective container to avoid possible cross-contamination. Control contaminated waste appropriately.
   - If contamination is still detected, write the instrument reading on the bag with an indelible ink pen and note the instrument reading in the Remarks section of the *Local Area Monitoring (LAM) TLDs* form. Isolate from noncontaminated environmental dosimeters.
4. Place a Security Seal around the neck of bag.
5. During transport, keep all environmental dosimeters in sealable plastic bags. Store them in a protected area, preferably in a shielded box.

CAUTION
Keep environmental dosimeters away from radiation sources.

6. Record the date and time of collection of each environmental dosimeter on *a Field Monitoring Log*.
   - Ensure that identifying numbers of collected environmental dosimeters match numbers recorded on the *Local Area Monitoring (LAM) TLDs* form.
   - Note on the *Local Area Monitoring (LAM) TLDs* form any environmental dosimeters damaged or missing from fixed stations.
7. Return all collected environmental dosimeters to Sample Control along with completed *Local Area Monitoring (LAM) TLD* form and transit controls.

4.4 STORAGE

Environmental dosimeters remain in the custody of the Field Monitoring Team until relinquished to Sample Control or a courier.

Exposed environmental dosimeters awaiting readout are stored in a shielded location, preferably shielded boxes.

Two unirradiated controls are placed in shielded containers within the storage area to establish background level.

This page intentionally left blank

5.0 FIELD SAMPLING

5.1 GENERAL GUIDANCE

NOTE

A *Sample Control Form* accompanies each sample.

Instrument readings are recorded at the sample site on a *Field Monitoring Log*. Follow the "Team Instructions," section 3.1.

1. Notify Net Control upon arrival at each designated sampling location.
2. It may be necessary to collect field samples and then move, after informing Net Control, to a low background area away from the plume to estimate sample activities in the field.
3. At the sampling location take ground field measurements.
4. Record data on a *Field Monitoring Log*.
5. Report results to Net Control.
6. Package and label the samples according to "Sample Packaging and Labeling," section 6.0.

5.2 EQUIPMENT AND SUPPLIES

Adhesive tape
Alert labels
Bottle of clean water
Clipboard
Disposable gloves
Field Monitoring Log
GPS
Indelible-ink marking pen
Plastic bags, 16×24 inches
Sample Control Forms
Scissors or knife
Security Seals
Shielded box
Survey instrument

5.3 DUPLICATE SAMPLES

A duplicate sample is a second sample which is approximately equal in mass or volume to the first sample and which is collected in the same manner, location, and time, and analyzed for the same parameters. Duplicate samples are typically collected to document the overall precision of the sampling and analysis process. Collecting these samples is of secondary importance to limiting exposure of field teams to ionizing radiation and other safety considerations.

Field teams collect duplicate samples by direction of the Field Monitoring Supervisor or Monitoring Manager. Any duplicate sample is collected, handled, packaged, and documented in the same manner

as the original sample. Remarks on the *Sample Control Form* identify the sample as a duplicate and reference the original sample control number.

5.4 AIR SAMPLES

In the event of a radionuclide release, air samples will help determine particulate and reactive gas activity in the plume, iodine concentrations, and resuspension concentrations. To provide background data, Field Monitoring Teams will take samples from normal, uncontaminated sampling locations in addition to other samples.

5.4.1 General Precautions

Weather conditions, such as heavy snow, rain, dust, and wind, can have a major impact on whether an air sample is representative of the actual environmental contamination levels. Filters can become completely clogged by snow, ice, or dust.

When retrieving a filter from an obviously loaded air sampler, it is important to make careful notes about the condition of the sample, the flow rate, and local conditions. If the filter head is clogged with snow:

1. Remove the sample head without scraping off any of the collected material.

2. Be careful to keep the snow from leaking out of the sample container as it melts.

3. Then, treat the filter normally, as an unclogged filter.

5.4.2 High-Volume Air Samples

General guidance for obtaining high volume air samples for analysis.

5.4.2.1 Special Equipment

AC generator	Propane or other fuel
Filter paper	Filter Sampling head or Annular Kinetic Impactor
Forceps	Staplex SF200 fluid
Glassine envelope	Planchet
Impactor planchet holder	High-volume air sampler
Oil	Tripod
Petri dish, 2.25-inch	

5.4.2.2 Procedure

1. Secure the high-volume air sampler firmly to the tripod or other mounting apparatus.
2. Select and attach the desired sampling head to the pump.
3. Position the assembled sampling apparatus with air intake facing the source of the suspected airborne radioactive material release.
   - The face of the sampler should be at breathing zone height, approximately 1.5 meters (5 feet).
   - To avoid effects of structurally induced turbulence, whenever possible the horizontal distance between the sampler and any structure should be equal to twice the height of obstruction.
4. Record the sampler number and other information on a *Sample Control Form*.
5. Turn the sampler on and record starting time and starting flow rate.
6. At the end of the required sampling time record the ending flow rate and stopping time on the *Sample Control Form*.
7. Turn off the power to the sampling apparatus.
8. Put on disposable gloves.
9. Remove the sampling piece.

   Filter Paper

   - Remove the filter paper carefully using forceps. If using an 8-inch × 10-inch filter, fold into quarters with the collection side in.
   - Place the filter paper in a sealable plastic bag. Seal the bag. Do not tear or cut the filter paper.
   - Affix the bar code label or write the sample control number on the plastic bag using an indelible ink pen.
   - Decontaminate forceps using clean water. Wipe dry.

   Planchet (if used)

   - Remove the planchet and place in a 2.25-inch petri dish.
   - Affix the bar code label or write the sample control number on the petri dish using an indelible ink pen.
   - Place the petri dish in a sealable plastic bag. Seal the bag.
10. Record all data on a *Sample Control Form* and *Field Monitoring Log*. Report results to Net Control.
11. Prepare the sample for transport to Sample Control in accordance with "Sample Packaging and Labeling," section 6.0.
12. Repeat the process if another sample is requested at this site.

5.4.3 Low-Volume Air Samples

General guidance is provided for obtaining low-volume air samples for analysis.

A standard sample consists of two parts: a filter and a cartridge. Unless otherwise directed, use both the filter and the cartridge.

5.4.3.1 Special Equipment

AC generator (optional)	Low-volume air sampler
Oil	Connector hoses
Forceps	Sampling head
Fuel	Glass-fiber filters
Cartridge*	

*Use charcoal cartridges for drills and exercises because of the high cost of silver zeolite cartridges. Use silver zeolite cartridges (unless otherwise instructed) during actual radiological emergencies, as they retain fewer noble gases than charcoal cartridges.

Using Battery Power from the Vehicle for Short-Duration Grab Samples

> **CAUTION**
> Automotive batteries produce explosive hydrogen gas. Use caution when attaching cable clamps to the battery to avoid sparks. Make sure the operating switch on the sampler is in the Off position while attaching cables to the battery.

1. Keep the engine running during the procedure to assure even voltage to the sampler and to avoid running down the car battery.
2. Ensure the exhaust is in the downwind direction.
3. Attach the ground cable to a metal object in the engine compartment, not directly to negative terminal.
4. Attach the positive (usually red) sampler cable directly to the positive terminal of the battery.

5.4.3.2 Using AC-Generated Power

- Position the generator far enough away from the sampler and downwind so that exhaust fumes are not picked up by the sampler.
- For generators placed in outdoor areas, use spark arrestors, when possible, to prevent wildland fires.

5.4.3.3 Procedure

> **NOTE**
> Assemble the equipment before entering the plume. When sampler will be left unattended for extended time, place all forms in a sealed plastic bag and attach or secure the bag to the sampler.

Inspect all equipment for:

- Apparent physical damage.
- Contamination, if equipment has been previously used.

1. Refer to "General Precautions" on air sampling, section 5.4.1.
2. Make sure the pump switch is in the Off position.
3. Install a glass-fiber filter into the sampling head assembly.
   - Obtain a new, unused glass fiber filter; inspect it for physical damage. If damaged, obtain a new filter.
   - Remove the particulate filter retaining ring. Center the new filter in the holder.
   - Reinstall the retaining ring, tightening it finger-tight to produce a proper seal. Ensure that the filter remains centered in assembly.

> **CAUTION**
> Over-tightening the retaining ring may tear the filter.

4. Install the specified cartridge. (Normally silver zeolite for actual radiological emergency conditions or the charcoal cartridge for exercise conditions, or as otherwise specified.)
   - Obtain new, unused silver zeolite or charcoal cartridge.
   - Remove the cartridge retaining assembly.
   - Note direction of flow indicated on the cartridge in assembly, ensuring that the air flow direction indicated on the cartridge and the sampler air flow match. Arrow on the cartridge should point toward the sampler.
   - Reinstall the retaining ring, tightening it finger-tight to produce the proper seal.
5. Connect the sample head assembly to the sampler. Tighten finger-tight to produce proper seal.
6. Do not place the air sampler on the ground. Place it on top of the car, if possible, or where cables will permit:
   - Off the ground, approximately 1.5 meters (5 feet).
   - Away from the vehicle exhaust gases, dust, dirt, and known surface contaminants. Keep away from the vehicle fan exhaust.
   - Unrestricted airflow.

7. Start the sampler. Determine the initial flow rate on the rotometer and record the flow rate and start time on the *Sample Control Form*.
8. Run the sampler as directed by Net Control or the monitoring plan.
9. Prior to turning the sampler off, determine the ending flow rate.
    - Turn off the sampler and record the ending flow rate and time off on the *Sample Control Form*.
    - Put on gloves.
    - Using forceps, remove the particulate filter carefully and place in a sealable plastic bag. Seal the bag. Decontaminate the forceps with clean water and dry.
    - Remove the cartridge and seal in a plastic bag. Package both the particulate filter and cartridge together in a second plastic bag.
10. Prepare the sample for transport to Sample Control in accordance with "Sample Packaging and Labeling," section 6.0.

5.5 WATER SAMPLES

5.5.1 General Guidance

5.5.1.1 Sample Selection

Water samples must be representative of the body of water the FRMAC is trying to analyze. If sampling in strong rain, wind, hail, etc., the body of water may become churned up to a point where material from the sedimentary layers becomes suspended in large quantities. This material can bias the "true" activity concentrations of the various radionuclides dissolved or suspended in the sample. Use common sense in selecting a representative sample. Choose a location with minimal turbidity and little or no vegetative debris.

Note: Glass containers will be used for tritium sampling.

5.5.1.2 Special Equipment

Absorbent towels	Plastic funnel
Bucket/Collection container	Rope
Cubitainers, 1 gallon	Waterproof gloves

5.5.2 Well Water

Use this procedure for both potable and non-potable wells that bring water to the surface using either submersible or surface pumps.

5.5.2.1 Sample Site Selection

Obtain water directly from manned wells, pumped wells, or abandoned wells and inlet/outlet areas of water treatment plants.

5.5.2.2 Procedure

1. Prepare to take a sample.
   - On a *Sample Control Form*, record the GPS reading, location, time, date, and other information. Include a description of the well (depth, if known; capped, etc.).
   - Use a bar code label or indelible ink pen to record the sample control number on the collection container.
2. Locate the tap nearest the pump.
3. Turn on the pump and/or open the faucet. Let it run approximately one minute for shallow wells (less than 40 feet) and five minutes for deep wells (greater than 40 feet). This will clear the pipe and produce fresh sample from aquifer serving the pump.

> **NOTE**
> These flush times may not meet U.S. Environmental Protection Agency (EPA) drinking water standards.

4. Using the funnel, if necessary, put small amounts of water into sample container, rinse, and discard water. Rinse the cap also. Dry the outside of the container if it becomes wet.
5. Fill the sample container. Approximately 3.5 liters (1 gallon) is usually needed for gamma analysis, so the sample container should be nearly full. Remove the funnel and cap all containers.

> **CAUTION**
> Glass containers for tritium analysis should be labeled and rinsed prior to sample collection. Fill containers completely to avoid air entrapment.

6. Turn off the faucet and/or well.
7. Decontaminate the funnel with clean water and place in a plastic bag.
8. Dry the exterior of the sample container with an absorbent towel.
9. Package and label the sample in accordance with "Sample Packaging and Labeling," section 6.0.

5.5.3 Surface Water

Surface water refers to lakes, ponds, streams, rivers, etc.

5.5.3.1 Sample Site Selection

- Choose an area that is open, not sheltered by trees or high brush, if possible.
- Consider the purpose of sampling when selecting a location; *i.e.*, intake for drinking water, areas of access for farm animals.
- Avoid areas where surface debris could inhibit sampling.
- Avoid areas of high turbidity or high sediment, if possible.
- Inlet/outlet areas of water treatment plants may both need to be sampled. Samples from still water areas may also be required.
- Take sample from midstream, if possible.
- When a lake or reservoir is sampled, the sample should represent water that makes up the largest portion of reservoir. Operating from bridges, docks, or boats may facilitate open-water collections.
- Avoid stirring up sediment and including it in the sample. Sample upstream if it is necessary to wade into water. Sampling buckets should not be allowed to sink to the bottom.

5.5.3.2 Procedure

1. Refer to "General Guidance," section 5.5.1 for the equipment list and water sampling information
2. Prepare to take a sample.
   - On a *Sample Control Form*, record the GPS reading, location, time, date, and other descriptive information.
   - Use a bar code label or indelible ink pen to record the sample control number on the collection container.
3. If the funnel and bucket have been previously used, they should be as clean as reasonably achievable.
4. Set the sample container in a stable location on the ground with the funnel inserted in the opening.
5. Stand downstream of bridges or structures.
6. Lower the bucket into the main channel of stream, disturbing sediments and aquatic vegetation as little as possible.
7. Collect a 3.5-liter (1-gallon) bucket of water and pour it into the sample container until the water in container is within 2 cm (1 in) of top.
8. Rinse the funnel and bucket with clean water.
9. Dry the container with an absorbent towel.
10. Package and label the sample in accordance with “Sample Packaging and Labeling,” section 6.0.

5.5.3.3 Rain Collection System

This procedure is for placement and use of a rain collection system, not for the collection of rainwater from puddles or standing on rooftops.

Rainwater sampling can be complicated by freezing or strong snow storms, which have a tendency to clog the rainwater collection apparatus. If snow is present on the collector, collect it along with the water sample and try to melt some of the snow before pouring the water into a collection container. Keep in mind that snow has a very low water density (so take a large sample). Most of the time, 3.5 liters (1 gallon) of water is needed for proper laboratory analysis. When taking a snow sample, try to remove a sample to pre-emergency depths. Sometimes you can tell by the crust on previous snow depth. Document the surface area. Avoid areas of drifting and scouring.

5.5.3.4 Special Equipment

- Graduated cylinder (at least 1 liter [1 quart])
- Rainwater collection system, with known or measurable surface area

5.5.3.5 Procedure

1. Refer to "General Guidance, section 5.5.1, for an equipment list and water sampling information.
2. Choose an area that is open, not sheltered by buildings, trees, or high brush, when possible.
3. Assemble the rain collection system at the desired location. Find a location where leaves or other debris cannot blow into it and clog the drain. In addition, make sure the collection system is anchored securely so high winds will not overturn it. Be aware that samples may have to be collected in freezing or near-freezing conditions.
4. Note on the *Sample Control Form* the date and time when the rain collection system was set up.
5. When returning to collect the rain sample, survey with a beta/gamma survey instrument, if applicable.
6. Prepare to take a sample.
   - On the *Sample Control Form*, record the GPS reading, location, time, date, and other descriptive information.
   - Use a bar code label or indelible ink pen to record the sample control number on the collection container.
7. Measure the precipitation.
   - Transfer the rainwater to a graduated cylinder directly, if possible.
   - If the water cannot be transferred directly to a graduated cylinder, pour the rainwater into a bucket. Measure the amount of water with a graduated cylinder. Record the volume on the *Sample Control Form*.

7. Collect the sample.
   - Using a funnel, if necessary, put a small amount of water into the sample container, swirl it around, and discard it. Be sure to rinse cap, too. Try not to wet the outside of the sample container.
   - Carefully fill the sample container. Approximately 3.5 liters (1 gallon) is usually needed for analysis, so the sample container should be nearly filled, if possible.
   - Remove funnel and cap all containers.
8. Rinse and decontaminate rainwater collection system with clean water before leaving. Include both catch basin and rain collection jug.
9. Dry container with absorbent towel.
10. Package and label the sample in accordance with "Sample Packaging and Labeling," section 6.0.
11. Note date and time on new form if additional samples are to be collected.

5.5.3.6 Building a Makeshift Rain Collection System

Equipment:	Sheet of plastic	4 stakes
	5-gallon bucket (~20 liters)	Some string
	A weight	

It is necessary to know the finished surface area of the plastic.

1. Cut a plastic sheet to the predetermined size. Tie each corner to the stake that will hold it 5-8 cm (2-3 inches) above the 5-gallon bucket when the stakes are driven in the ground and the plastic is stretched out like a canopy.
2. Cut a small slit in the center of the plastic and center the bucket under the hole.
3. Place the weight over the slit.

The weight provides slight a downward slant to the plastic. The rain will run into the bucket.

This system will not stand up well to heavy rain, wind, or snow, but in an emergency it is simple to set up and move.

5.5.4 Public Drinking Water

5.5.4.1 Sample Site Selection

Collect a sample from the distribution system, as requested.

5.5.4.2 Procedure

1. Refer to "General Guidance," section 5.5.1, for an equipment list and water sampling information.
2. Prepare to take a sample.
   - On the *Sample Control Form*, record the GPS reading, location, time, date, and other descriptive information, including location of the tap. For a treatment plant, obtain and include holdup time and time in and time out.
   - Use a bar code label or indelible ink pen to record the sample control number on the collection container.
3. If tap water samples are to be collected, rinse and wipe off the faucet so contamination does not drop into the sample. Turn on the faucet and let it run for approximately one minute. This will clear the pipe and produce a fresh sample from the main serving faucet.
4. Carefully fill the sample container. Approximately 3.5 liters (1 gallon) is usually needed for gamma analysis, so the sample container should be nearly full.
5. Remove the funnel and cap all containers.
6. Turn off the faucet.
7. Rinse the funnel with clean water and dry it. Place the funnel in a clean plastic bag.
8. Dry the exterior of the sample container with an absorbent towel.
9. Package and label the sample in accordance with "Sample Packaging and Labeling," section 6.0.

5.6 SOIL SAMPLES

5.6.1 General Guidance

This procedure addresses the collection of different types of soil under varying conditions. In the early phase of an emergency, soil is collected for the purpose of surface contamination monitoring, not plant uptake prediction. The most important variable is the surface area of the sample. The depth of the sample is also important, as all activity is deposited on the surface of the soil and unnecessary depth will dilute the sample results. This entire procedure should be reviewed and portions modified to fit the type of soil to be sampled.

5.6.1.1 Sample Selection

In order to collect a representative soil sample, choose soil that is relatively dry, except for sediment, and is in a flat, open area. Do not sample under trees, bushes, or other overhanging objects. Avoid windrows or areas next to roads. If the area to be sampled is covered with vegetation, leaves, etc., treat that portion as a separate vegetation sample (see "Soil with Vegetation," section 5.6.6).

5.6.1.2 Special Equipment

Quart Size sealable bags	Hammer, if soil is compacted
Sampling frame, 10 × 10 cm	Work gloves
Flat Trowel	Tape Measure
Nalgene bottle, 16 ounce	

5.6.2 Ground Deposition

5.6.2.1 Procedure

1. Refer to "General Guidance," above, for an equipment list and soil sampling information.
2. Prepare to take the sample.
   - Place all sampling tools and the *Sample Control Form* into a plastic bag for carrying.
   - To avoid contamination, place plastic bags on the ground; lay the clipboard, instruments, and tools on the bags.
   - On the *Sample Control Form*, record the GPS reading, location, time, date, and other descriptive information.
   - Put on work gloves over disposable gloves.
   - Survey the site using an appropriate survey meter, taking readings approximately 1 meter (3 feet) and at 2.5 cm (1 inch) above ground. Record the readings on a *Field Monitoring Log*.
   - Use a bar code label or indelible ink pen to record the sample control number on the quart sized sealable bag or 16-oz nalgene bottle.
3. Be careful not to disturb the sample collection area while digging the trench.
4. Using a trowel, dig a trench 45 cm long × 15 cm wide × 15 cm deep (18 × 6 × 6 in). Fashion a vertical surface that is as straight as possible, Figure 2.
5. Place the open end of the sampling frame (Figure 2) against the edge of the trench to form a 10 × 10-cm (4 × 4-in) square sample area. Press or tap (if hard) the cutter edge into the soil to stops (2 cm deep).
6. Slide the flat trowel under the sampling frame, pick up the sample, and slowly dump it into a sealable bag or a 16-oz nalgene bottle. Check that the sample control number is on the container.
7. Record the depth taken on *Sample Control Form*.
8. Clean the sampling equipment with water.
9. Package and label the sample in accordance with "Sample Packaging and Labeling," section 6.0.

5.6.3 Wet Soil

If rain and water saturation make it impossible to dig next to the collection area, attempt to remove the surface layer of the collection area with a scoop.

If snow has fallen since the suspected time of deposition, gently remove as much snow as possible from the collection area and take the sample. If snow fell before deposition occurred, sample the snow then take a soil sample. Record sample control number of the co-sample on the *Sample Control Form*.

CAUTION

At all times, try to minimize vegetative contamination.

Do not scrape or sweep the surface of the ground.

5.6.4 Dry Soil

Unconsolidated or sandy soil that is extremely dry and falling apart should be sampled carefully without digging a trench next to the area. From a known area, collect the soil by carefully lifting the surface area off the measured plot using the scoop.

5.6.5 Sandy Soil

Soil that is primarily sand will fall apart easily during sampling. The same procedure used for unconsolidated dry soil can be used with sandy soil.

5.6.6 Soil with Vegetation

When it is necessary to collect a sample that is covered with grass, weeds, or other organic material, clip closely and treat it as a vegetation sample. Bag it separately.

Collect soil as outlined above, depending on the soil condition. Note the location and surface area on the *Sample Control Form*.

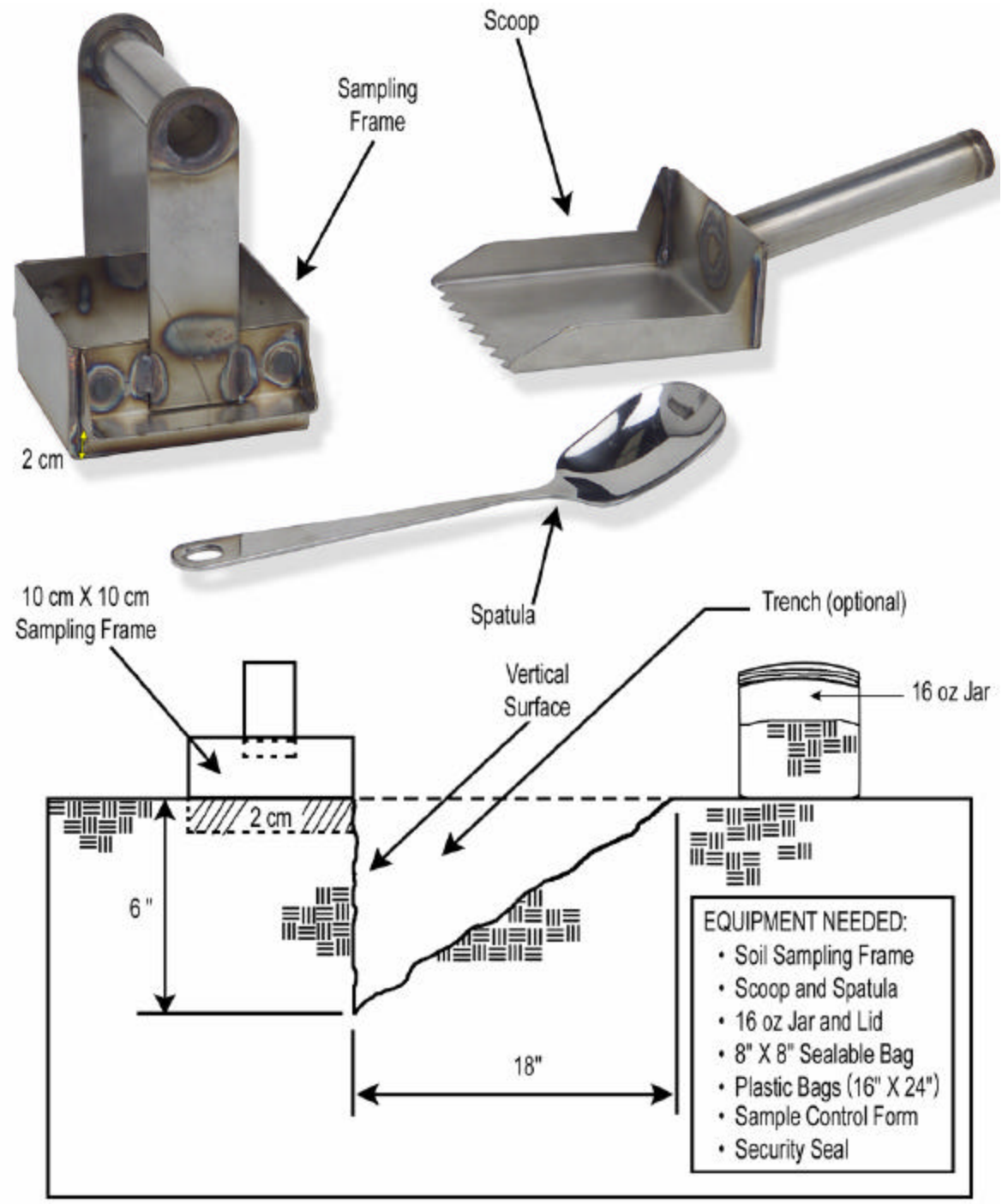

FIGURE 2. ***SOIL SAMPLING FRAME***

5.6.6.1 Procedure

1. Mark the exact area to be sampled and collect two samples:

   Sample 1: Remove and collect all ground cover vegetation, cutting vegetation as closely as possible, with minimal disturbance of soil.
   Sample 2: Collect the soil sample, including root mass if grass.

2. Cross-reference sample control numbers of these co-collected samples.

5.6.7 Sediment

A sediment sampling device attached to a 50-meter (150-foot) line is used to collect the sediment.

5.6.7.1 Special Equipment

Clean tub	Rope - 50 meters (150 feet)
Sediment sampling device	Cardboard box

5.6.7.2 Procedure

1. Refer to sediment sampling device manual or procedure for operational information.
2. Prepare to take the sample.
   - Place all sampling tools and a *Sample Control Form* into a plastic bag for carrying.
   - To avoid contamination, place plastic bags on ground and lay clipboard, instruments, and tools on bags.
   - On a *Sample Control Form*, record the GPS reading, location, time, date, and other descriptive information.
   - Use a bar code label or indelible ink pen to record the sample control number on the collection container.
3. Put on work gloves over disposable gloves.
4. Use the sediment sampling device to collect the sample.
5. Retrieve the sediment sampling device and lower it into a plastic bag.
6. Open the sediment sampling device to deposit the sediment into the bag.
7. Using a scoop, remove at least 1 liter (~1 quart) of sediment into pre-labeled, 1-gallon bag.
8. Repeat procedure, filling the second bag, if duplicate sample is required.
9. Place the bags in a cardboard box.
10. Rinse the sampling gear thoroughly.
11. Package and label the sample in accordance with “Sample Packaging and Labeling,” section 6.0.

5.7 HUMAN FOOD SAMPLES

5.7.1 General Guidance

NOTE
Collect at least 1 kilogram (2.2 pounds).

5.7.1.1 Sample Selection

The purpose of human food sampling during the emergency phase is to measure deposition, not plant uptake. Collect vegetation samples from the same type plant, preferably a grassy type of vegetation, if available, and collect the green or leafy portions of the plant. Collect only the top portions of the plant, not the roots or stems.

Garden samples should be consistent with respect to readiness for harvest. The crop may be selected directly from plants or from crates. A notation should be made on the physical state of the sample.

Select a location for a grab sample or mark grid locations of one square meter (~10 square feet) or larger in the area to be sampled.

Use of mechanical harvesters is encouraged to collect samples when practical. Manual collection of enough wheat or rice, for example, to make an appropriate size sample might be too time consuming.

In a field or garden, collect the sample from an area unprotected from the wind whenever possible; i.e., away from trees, structures, etc.

Personnel from supporting state or county agencies, the U.S. Department of Agriculture, or the U.S. Department of Public Health will normally be present at the FRMAC to provide assistance.

5.7.1.2 Special Equipment

Hammer	Shovels
Knife	Tape measure
Mechanical cutters/Harvesters	Work gloves

5.7.1.3 Procedure

1. Prepare to take sample.
   - Place all sampling tools and *Sample Control Forms* into a plastic bag for carrying.
   - To avoid contamination, place plastic bags on the ground and lay the clipboard, instruments, and tools on the bags.
   - On a *Sample Control Form*, record the GPS reading, time, date, and other descriptive information. Note the grid area or approximate location from which the sample was taken.
   - Survey the site using an appropriate survey meter, taking readings approximately 1 meter (3 feet) and at 2.5 cm (1 inch) above ground. Record all readings on a *Field Monitoring Log*.
2. Use bar code label or indelible ink pen to record sample control number on sample collection container.
3. Put on work gloves over disposable gloves.
4. Bag enough product to satisfy sampling requirements. Do not add additional leaves, stems, or other parts not considered edible.
5. Rinse any tools used in sample collection with clean water before reuse.
6. Package and label the sample in accordance with "Sample Packaging and Labeling," section 6.0.

5.7.2 Vegetation/Fruit

In almost all radiation emergencies, leafy vegetables retain airborne contamination and may be a health problem if consumed. It is important to collect the vegetables and any moisture which may be on them, whether frozen or not.

5.7.2.1 Special Equipment

Appropriate cutting tool

5.7.2.2 Procedure

Same as for Human Food Samples in Section 5.7.1.3.

> **NOTE**
> Collect at least 1 kilogram (2.2 pounds) and note the dimensions of the area collected (*i.e.*, for surface vegetation) on the *Sample Control Form*.

5.8 MILK SAMPLES

Personnel from supporting state or county agencies, the U.S. Department of Agriculture, or the U.S. Department of Public Health will normally be present to provide assistance to Field Monitoring Teams. Lists of milk receiving and transfer stations should be maintained by these agencies.

5.8.1 General Guidance

5.8.1.1 Sample Selection

For a variety of reasons, milk samples are very important in a radiological emergency. Timely sample collection and assay is required. Samples will normally be taken from receiving and transfer stations, processing plants, and individual dairy farms.

If possible, when raw milk is sampled, the sample should be taken from cows that have been grazing in the area of interest, not fed from stored feed.

Besides milk samples, it is important to collect samples of the hay, grass, feed, and water being consumed by the animals.

Representatives from the county or state Department of Agriculture or the U.S. Department of Health Services may be assigned to assist in the planning, liaison, and/or collection efforts.

5.8.2 Commercial Dairies

Pasteurized milk is generally a blend of milk collected from many locations. Obtain available information on milk sources. If possible, ask from which location(s) the milk is obtained.

Some commercial dairies have milking systems that are under vacuum during the milking cycle. These dairies will not be able to provide a sample until after the cycle is complete. It may be necessary, therefore, to leave a container for the dairy personnel to fill and pick up the sample later. Dairies also have an agitator in the refrigerated holding tank, so any sample is considered a composite. Note from what areas milk is obtained.

5.8.2.1 Special Equipment

Cubitainers	Ice chest
Ice	Preservative (Formaldehyde), as requested

5.8.2.2 Procedure

1. Arrange an efficient route of travel for collecting milk samples. Include availability of milk, accessibility due to weather, etc.
2. Present sample containers to the primary contact at the sampling station. Primary contact at ranches and residences might be a family member; at dairies or processors the main contact may be office employee, herdsman, or other employee with signatory authority.
3. Telephone ahead to request that the required amount of milk be reserved for pickup.
4. Follow instructions of state or county personnel or plant workers.

5. To prevent contamination of collected milk, use only thoroughly clean sample containers during transit and handling.
6. Collect one sample of at least 3.5 liters (1 gallon).
7. Collect raw or whole milk (cream mixed into the milk) whenever possible.
8. Net Control or the monitoring plan will advise if preservative is to be added to the sample, when to collect two samples or special milk samples, and the general area in which to collect them.
9. If for any reason the milk sample(s) cannot be obtained at the designated location, consult Net Control for an alternate source in close proximity to the designated location, and attempt to collect the sample or samples at the alternate location.
10. Mark the milk samples or place a bar code label on container, and transport them to the laboratory as soon as possible.
11. During hot weather, place all milk samples in an ice chest.
12. Package and label the sample in accordance with "Sample Packaging and Labeling," section 6.0.
13. Deliver all milk samples to Sample Control. Each sample is to be accompanied by a completed *Sample Control Form*.

NOTE
The Field Monitoring Team itself does not milk animals or take samples from tanks.

5.8.3 Small Farms

Since milk from family cows is limited (family use, feeding calves, etc.), replacement of the milk from a commercial source may be necessary.

5.8.3.1 Procedure

1. Attempt to contact the farmer prior to arrival. A representative from the county or the state Department of Agriculture or U.S. Department of Health Services may be assigned to the field team as liaison. However, the field team is often on its own. Written directions should be available at the FRMAC to help teams locate the dairies. The county sanitarian is also familiar with the local milk producers and is accustomed to the process by which whole milk is collected and processed at dairies.
2. When it is necessary to obtain a sample from an individual animal, the owner should be asked to perform the task. Ask the person to put on disposable gloves before milking. Be sure the collection bucket and the cow's udder are clean.
3. Fill the sample container with milk.

4. Use an indelible ink pen to label the collection container with the sample control number, or place a bar code label on side of container. Complete a *Sample Control Form* with the name of dairy, location, date, time of milking represented by the sample, volume of milk the sample represents, production dates (the last time the cows were milked), variety of herd, milking schedule, type of feed, water source, and collector's initials.
5. Rinse all devices used in the sample collection with clean water.
6. Prepare and label the sample in accordance with "Sample Packaging and Labeling," section 6.0.
7. Place packaged samples in an ice cooler for transport.

5.9 ANIMAL FEED SAMPLES

Different types of feed samples are collected under varying conditions to determine the impact of ground deposition radioactivity on the contamination of milk.

NOTE
These samples are also collected in conjunction with special milk samples.

5.9.1 General Guidance

Personnel from supporting state or county agencies, U.S. Department of Agriculture, or U.S. Department of Health Services are normally present to provide assistance to Field Monitoring Teams.

5.9.1.1 Sample Selection

Sampling sites should be:

- Representative of the region of interest.
- Openly exposed to deposition; i.e., away from trees, structures, etc.
- Easily sampled—free of large rocks, trees, and other interference.

The sampling area should have:

- Relatively uniform distribution of vegetation.
- Vegetation that covers the ground.

Collect:

- Grab samples of each type of feed where animals may be feeding.
- From the same type of plant, preferably grassy type of vegetation (if available).
- Green or leafy portions of plant, not roots and stems. Avoid collecting weeds.

Collect samples of each type of feed from those portions of the sample which are most exposed to the atmosphere:

Type	Amount to Collect
Granular or Cubed feed	Equivalent of one Cubitainer full of granular feed; one 16- × 24-inch plastic bag full of cubed feed
Hay Green chop	One 16- × 24-inch plastic bag full **or** Equivalent of one Cubitainer full **but** A minimum of 1 kilogram (2.2 pounds)
Silage Grain Pasture*	
*Pasture is classed as animal feed when collected as indicator of what cows are eating, as distinguished from natural vegetation collected as indicator of cloud passage; *i.e.*, passage of airborne radioactivity following release from any source.	

5.9.1.2 Special Equipment

Grass shears, scythes	Tape measure
Knife	Work gloves
Mechanical cutters	

5.9.1.3 Procedure

1. Prepare to take the sample.
   - Place all sampling tools and the *Sample Control Form* in a plastic bag for carrying.
   - To avoid contamination, place plastic bags on the ground and lay the clipboard, instruments, and tools on the bags.
   - Survey the site using an appropriate survey meter, taking readings approximately 1 meter (3 feet) and at 2.5 cm (1 inch) above ground. Record all readings on a *Field Monitoring Log*.
   - On a *Sample Control Form*, record the GPS reading, time, date, and other descriptive information. Note the grid area or approximate location from which the sample will be taken.
   - Use an indelible ink pen to record the sample control number on the collection container or place a bar code label on front of the container.
   - Put on work gloves over disposable gloves.

2. Bag enough product to satisfy the sampling requirements. Do not add additional leaves, stems, or other items not considered edible. Cut vegetation no closer than 1 cm (0.5 inch) to avoid contaminating the sample with soil. Note the dimensions of the area collected on the *Sample Control Form*.
3. Rinse any tools used in sample collection with clean water before reuse.
4. Package and label the sample in accordance with “Sample Packaging and Labeling,” section 6.0.

5.9.2 Leafy Animal Feed

If leafy greens are mixed, they must be from the same sample site (1 kilogram [2.2 pounds], or larger) as required and noted on the *Sample Control Form.* This procedure also applies to standing grains and standing hay, both of which are categorized as pasture deposition measurements in the derived intervention levels.

Standing Grains: wheat, rye, barley, buckwheat, oats, and soy beans

1. Standing Hay: alfalfa, sweet clover, timothy, vetch, etc.
2. Refer to “Animal Feed Samples,” section 5.9, for "General Guidance" and "Procedure."
3. For each sample, attempt to collect at least 1 kilogram (2.2 pounds) and note the dimensions of the area collected on the *Sample Control Form*.
4. Package and label the sample in accordance with “Sample Packaging and Labeling,” section 6.0.

5.9.3 Hay Bale

Collect grab samples of each type of hay. If possible, collect the sample from bales unprotected from the wind; *i.e.*, away from trees, structures, etc.

1. Refer to “Animal Feed Samples," section 5.9, for "General Guidance" and "Procedure."
2. Take at least 1 kilogram (2.2 pounds) of hay for each sample.

   Be sure to sample from the outer portion of the hay bale, taking samples from the top of the bales. Do not add additional leaves, stems, or other items not part of the hay bale.
3. Package and label the sample in accordance with "Sample Packaging and Labeling,” section 6.0.

6.0 SAMPLE PACKAGING AND LABELING

6.1 LABELS AND SEALS

6.1.1 Alert Labels

As directed by the Monitoring Manager, Field Monitoring Teams attach color-coded labels to sample containers to assist in processing. The Monitoring Manager makes the final decision on the priority of the samples. Figure 3 shows *Alert Labels* and a *Security Seal*.

A*lert Labels* are used to:

- Assist in segregating samples.
- Alert Sample Control of elevated radiation levels.
- Designate priority of processing at Radioanalysis Laboratory.

Color	Radiation Level	Processing Priority
Red	Above background levels (5 times background unless otherwise directed)	1
Yellow	HIGH PRIORITY	2
Blue	PRIORITY	3

NOTE
Special tags may be designated by the Field Monitoring Supervisor

6.1.2 Security Seals

Security Seals are used by Field Monitoring Teams to officially seal field samples. When no *Security Seals* are available, one can be made from masking or adhesive tape.

Before sealing the sample, write the following information on the *Security Seal*.

1. Write the sample date.
2. Initial the sample (by the person who collected the sample).
3. Wrap the *Security Seal* around the plastic bag with the ends making a flag, or seal over the top of the sealable bag or sample container.

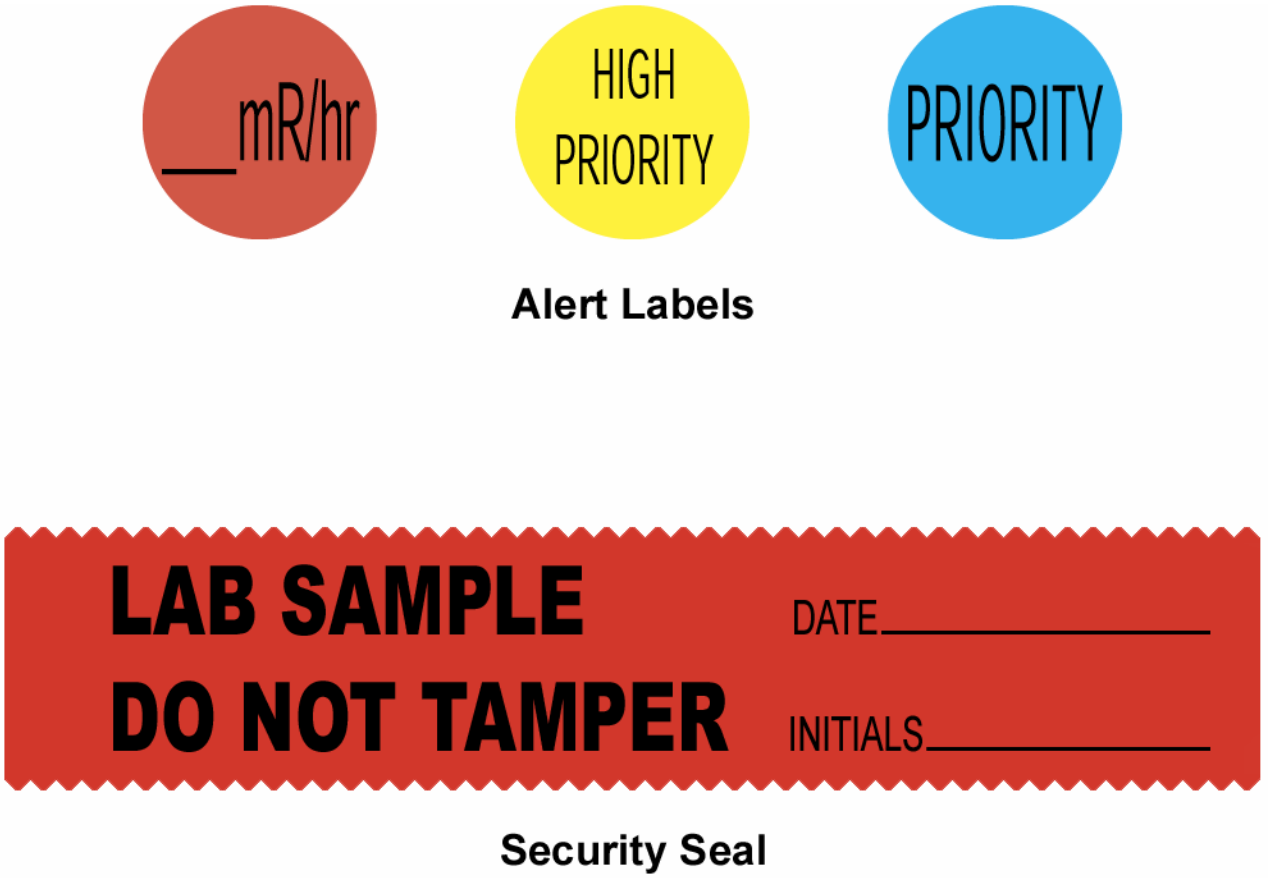

Figure 3. ***Alert Labels*** **and** ***Security Seal***

6.2 PACKAGING AND LABELING

This procedure applies to packaging and labeling of all field samples for transport to Sample Control by the Field Monitoring Teams.

6.2.1 Precautions

- Avoid cross-contamination.
- Wear disposable gloves.
- Change gloves frequently if contamination is suspected.
- Segregate above background samples (5 times background unless otherwise directed).
- In transit, store above background samples (5 times background unless otherwise directed) in a shielded area of the vehicle or as far away from passenger area as possible and separated from all dosimeters.
- Ensure samples are secure.

When exiting/entering vehicle, ensure samples are not dislodged from storage area.

6.2.2 Procedure

After performing the sample collection and preparation procedures given in the specific procedure for the type of sample collected, complete the following to prepare the collected sample for transport to Sample Control.

1. Perform surface gamma radiation exposure rate survey of sample container.
2. Record results on *Sample Control Form* and complete all applicable sections.
3. Write the sample number on the primary sample container (bag, bottle, etc.) and place it into a clean plastic bag, taking care not to contaminate outer surface of the bag.
4. If contamination levels require it, place the following two items in another plastic bag. Ensure all information is readable:
   - Doubly contained samples

     and
   - *Sample Control Form*

NOTE
Ensure that *Sample Control Form* information is visible through the bag.

5. Seal the bag. Enter sample collection on *Field Monitoring Log* with Sample Control #, location, type, etc.

6. Place completed *Security Seal* around sealed neck of bag (or across the folded top of self-sealing bags). Only one bag/container requires a *Security Seal.*
   - Ensure information on *Security Seal* can be read.
7. If surface gamma exposure rate is greater than background, record the reading on the red bag label (mR/hr) or directly on the sample container.
8. Place PRIORITY or HIGH PRIORITY label on bag if directed by Net Control.
9. Retain original and yellow copies of *Sample Control Form* for submission to Sample Control. Minimize contamination by placing copies in a clean plastic bag or keeping them in “clean" area.
10. Load samples in vehicle for transport to Sample Control.
11. When leaving vehicle, ensure that all samples are secure and vehicle is locked.
12. Transport samples to Sample Control or transfer to courier maintaining Chain-of-Custody.

7.0 SAMPLE CONTROL

Sample Control is responsible for the receipt and administrative processing of field samples. Field Monitoring Teams deliver samples, and Chain-of-Custody is transferred to Sample Control. Samples are checked, sorted, and sent to the Sample Preparation area, then to the Radioanalysis Laboratory for processing.

7.1 CHAIN-OF-CUSTODY

Chain-of-Custody is the sample tracking and control procedure used for ensuring that samples and data maintain their original identity and integrity throughout the collection, shipment, and analysis processes. The record of Chain-of-Custody is kept on the *Sample Control Form*.

The Chain-of-Custody procedure requires that samples be identified and their location and handling be known from initial acquisition through eventual consumption, storage, or disposal. This includes logging all activities affecting the sample through signature documentation of receipt, possession, and release by all persons handling the sample.

Each person handling samples is responsible for the security and documentation required for the Chain-of-Custody procedure. Samples are transferred only to authorized personnel.

The sample, with documentation, is under custody when:

- It is in your possession, <u>or</u>
- It is in your view, after being in your possession, <u>or</u>
- It was in your possession and you locked it up, <u>or</u>
- It is in a designated, secure area.

Each time the sample changes hands, the persons relinquishing and receiving the sample will sign the Chain-of-Custody section of the *Sample Control Form*.

7.1.1 Procedure

The person who collects the sample:

1. Initiates the Chain-of-Custody by sealing the sample container with a *Security Seal*.
   If a *Security Seal* is not available, make one using masking tape or adhesive tape.
2. Initials the *Security Seal*, including date and time.
3. Transfers custody of the sample, usually to Sample Control, by completing and signing the Chain-of-Custody section of the *Sample Control Form*.

7.2 SAMPLE RECEIVING LINE

The Field Monitoring Team, or Sample Courier if one is used, is responsible for the proper packaging, handling, and transport of a sample until it is received and acknowledged by the Sample Control personnel, to whom responsibility is transferred.

The person collecting and/or delivering samples to Sample Receipt will:

1. Notify Net Control as soon as possible from the field that samples are coming in to Sample Receipt. To improve processing, include estimate of number and type of samples and estimated range of radiation readings.
2. Separate samples labeled HIGH PRIORITY and PRIORITY. Presorting samples will further aid processing and counting.
3. Upon arrival at Sample Receipt:
   - Stop in a designated area (approximately 8 meters [25 feet] away from Sample Receipt) and wait for instructions from Sample Control personnel.
   - Ensure that all labels are legible and can be read through sample bags.
   - Check samples for evidence of leakage.
   - Notify Sample Control personnel if repackaging is required.
4. Advise Sample Control personnel of any pertinent information concerning samples.
5. Ensure *Local Area Monitoring (LAM) TLDs* forms are in boxes or bags with corresponding TLDs.

CAUTION
Keep TLDs away from radiation sources.

6. Complete the Chain-Of-Custody section on the *Sample Control Form* and *Local Area Monitoring (LAM) TLDs* form.
7. Turn over all records and samples to Sample Control personnel.

NOTE
Do not leave the area until instructed to do so by Sample Control personnel.

8. Proceed to the Contamination Control Line.

7.3 CONTAMINATION CONTROL LINE

When a field team returns, Contamination Control Line personnel survey the Field Monitoring Team, equipment, and vehicle to limit the spread of radioactive material.

- If the team is to return to the field, no routine survey is taken of the vehicle or field team personnel.
- If the Field Monitoring Team is not returning to the field, team personnel should follow the directions of the Contamination Control Line technician. The approximate sequence of activities will be as follows:
    1. Stay in the vehicle until the exterior is surveyed, unless otherwise instructed.
    2. Allow the technician to survey your feet before exiting the vehicle.
    3. Exit the vehicle.
    4. Unload equipment and instruments and place them in designated areas.
    5. Process through the Contamination Control Line as instructed by Contamination Control Line personnel.

This page intentionally left blank

8.0 EQUIPMENT CONTAMINATION SURVEYS

Occasionally equipment may need to be surveyed in the field for contamination. Surface contamination can usually be detected by direct monitoring methods. The indirect (smear) method may be the primary monitoring procedure under conditions of high background, insufficient sensitivity, lack of accessibility, etc. On occasion, direct measurement may be followed by smears of representative portions.

8.1 DIRECT METHOD OF SURFACE MONITORING

8.1.1 Measurement Techniques for Alpha Surveys

- Avoid damage or contamination of instrument window or probe area covering material.
- Since alpha particles have a short range in air, standoff attachments can be used to keep the probe about 0.64 cm (0.25 inches) from the monitored surface.
- Hold the probe with gloved fingertips extending below bottom edge of the probe.
- Dislodge contaminating particles from the window or probe area by lightly tapping instrument or probe.
- Do not use masking tape to pick up particles from the window. Residual adhesive on the window covering may cause additional contaminating particles and foreign material to adhere.
- Alpha surveys of large areas are qualitative because only representative locations can be checked. Usual survey techniques involve making several surface measurements at regular distances over the area. The number of measurements depends on size of area and monitoring time available.
- The holes in the probe window can be repaired with small pieces of opaque tape or paint; sensitive area will be decreased and some measurement error will be introduced. When temporary repairs have been made, instruments should be returned to the Instrument Calibration Officer as soon as practical.

8.1.2 Procedure

1. Make sequential measurements over the entire surface, as appropriate, with the stationary detector or by slowly sweeping the detector over the surface.

   If the detector passes over an isolated, small-diameter source, the number of pulses produced by the source in the detector will be inversely proportional to the scanning speed.

CAUTION

Nominal scanning velocity should not exceed 5 cm (2 inches) per second.

2. Hold the probe stationary no more than 0.64 cm (0.25 inches) from the probe window to the monitored surface.
3. Hold sensitive window or probe area over each part of the surface monitored long enough to observe the average value of the meter needle fluctuation.
4. Speaker- or headphone-equipped instruments are desirable for low-level monitoring.
5. Record all measurements on a *Field Monitoring Log*.

8.2 INDIRECT (SMEAR) METHOD OF SURFACE MONITORING

Use as a sensitive method to determine the removable surface contamination.

8.2.1 Procedure

1. Select a representative sampling surface that:
   - Is flat, smooth, and stationary, if possible.
   - Smear can be rubbed on and smear will not roll up or fall apart.
2. Mark off known area such as:
   - 100 cm^2 or 10×10 cm (4×4 in) or approximately the size of a dollar bill.
   - 30×30 cm (1 ft^2 or 1×1 ft)
3. Label the glassine envelope or plastic bag with the appropriate information (sample location, date, time, and collector's initials).
4. With two gloved fingers, carefully rub the smear over the pre-marked area. Apply moderate pressure; be consistent if performing multiple smears.
   - Take care not to shake off collected material.
5. Determine the amount of radioactive material on the smear with the appropriate instrument of known efficiency (including geometry). A GM pancake probe is usually used for beta/gamma and an appropriate alpha instrument for alpha contamination.
6. Place the smear in a glassine envelope.
7. Record readings on a *Field Monitoring Log*.
8. Package and label in accordance with “Sample Packaging and Labeling,” section 6.0.

NOTE

If several smears are taken from one location, make an area drawing that identifies smears by number and location.

9.0 PORTABLE SURVEY INSTRUMENTATION

Portable survey equipment for FRMAC is supplied and calibration maintained for a response by Bechtel Nevada and other responding organizations. It is acknowledged that there are many instruments with similar capabilities that will be deployed for a FRMAC response by other agencies. Those that meet the QC requirements and have the capability to measure with the appropriate sensitivity may be used upon approval of the Monitoring Division.

9.1 GLOBAL POSITIONING SYSTEM

A Global Positioning System (GPS) is a navigational instrument that uses signals from satellites orbiting the earth to determine its present location and guide its user to a destination. GPS technology is presently in a rapid state of flux with improved spatial resolution and simplified operation being introduced frequently in new products. The readout will be recorded in degrees and decimal degrees. Several brands of GPS instruments are available. Field Monitoring Teams will be provided with GPS units.

9.2 GEIGER-MUELLER DETECTORS

Although Geiger-Mueller (GM) detectors typically have a beta shield or thin window, they cannot quantitatively measure the beta dose rate, as they are typically calibrated for gamma exposure rate in Roentgens/hour (defined for photons in air). The beta shield may be opened to detect the presence of beta radiation and/or contamination, but gamma quantification information will be lost as the instrument no longer has a flat energy response for gamma rays and it will also now detect low-energy photons. Beta results from a GM instrument are relative cpm measurements only and should be checked with an ion chamber.

9.3 OTHER INSTRUMENTATION

Additional instruments such as ion chambers, scintillators, and proportional counters will be used when available and as necessary.

9.4 FIDLER-BASED INSTRUMENTS

9.4.1 FIDLER Measurements

Ideally, the survey areas should be flat, treeless/building-less areas of bare ground, asphalt or concrete surfaces, or closely cut grass areas.

Avoid carrying the FIDLER detectors in fields with tall weeds that can brush against the detector face.

9.4.2 Instrument Selection

The preferred instrument for the plutonium contamination detection surveys are the Violinist and the FIDLER, operated in the rate meter mode, displaying both analog and digital count rates, with the speaker On.

9.5 CALIBRATION RECORDS

Calibration records are required to meet ANSI N323.

1. Affix a calibration sticker to each instrument.
2. If the instrument is out of tolerance and cannot be used, label it appropriately.
3. Provide other information about the instrument, such as energy correction factors, calibration graphs or tables, or any other special conditions.

9.6 POST-CALIBRATION PERFORMANCE TEST

To assure proper operation, each instrument will be tested with a check source at the beginning and end of each shift. Two types of checks are performed on each instrument:

- QC source checks
- Operational checks in the field

Each instrument must be periodically checked to ensure proper response to radiation. These QC checks will be performed during shift change or during routine maintenance.

10.0 FRMAC STANDARD UNITS

The primary reason for establishing Standard Reporting Units for FRMAC operations is to enhance communications and minimize the occasions for errors. The use of the common units by all groups ensures that all results presented to decision makers are consistent and understandable and that decision trees and tables are easily applied.

10.1 RADIOLOGICAL UNITS

Some common units are given below:

	Conventional Units	S.I. Units
Dose	Rem	(Sv)
Exposure Rate	mR/hr	(mGy/h)
Surface isotopic deposition	µCi/m^2	(MBq/m^2)
Air flow-detectors	cfm	(m^3/min)
Volume activity concentrations		
Air Concentrations	µCi/ml	(Bq/ml)
Liquids	mCi/L	(Bq/L)
Soils	mCi/g	(Bq/g)
Tissue	mCi/kg	(Bq/kg)
Vegetation	mCi/kg	(Bq/kg)
Contamination		
Smear samples	dpm/100 cm^2	(Bq/100 cm^2)
Surfaces	dpm/100 cm^2	(Bq/100 cm^2)

10.2 UNITS OF MEASURE

Units will be those necessary to meet reporting requirements such as PAGs.

10.2.1 Time

Time units will be reported as FRMAC time (where the FRMAC is located) at measurement location in military units.

Example: 2:15 pm is written: **1415**

7:42 am is written: **0742**

10.2.2 Date

Dates will be reported as Day/Month/Year, DD-MMM-YYYY.

Example: 08-Jul-2001

10.3 METEOROLOGY

Wind speed	miles per hour (mph)
Wind direction	from in degrees (closest 5 degrees, true North)
Wind elevation	in feet above ground level or above mean sea level (MSL)
Temperature	degrees °F (°C)

10.4 MAP ORIENTATION

Map and/or photo orientation will always be with TRUE North straight up.

10.5 LOCATION

The location of all monitoring data will be reported in latitude and longitude units, when available, AND a physical description (street corner, road junctions, etc.) for map location.

10.6 GPS UNITS

All position coordinates should be reported in (DEGREES.DECIMAL DEGREES).

Example: 043.3864°

GLOSSARY[1]

Absorbed Dose[2]	Energy absorbed by matter from ionizing radiation per unit mass at the location of interest in a material. Units are rad (S.I. units are Gray; 1 Gy = 100 rad).
Administrative Control Levels (ACLs)	Multi-tiered numerical exposure levels established below occupational exposure limits described in 10 CFR 835 to assure that personnel radiation exposures are administratively controlled and limited. Managers with increasing levels of authority are required to approve justification for incrementally higher levels of radiation exposure within Administrative Control Levels.
Aerial Measuring System	An airborne system used to detect, locate and measure low levels of airborne radiation. In addition to multi-spectral sensing capabilities and instrumentation for determining geodetic positions, the system can acquire aerial photography.
Airborne Radioactive Material	Radioactive material dispersed in air. Airborne radioactive material may include colloidal suspensions, windblown dust, fumes, mists, vapors, gases or any other airborne media.
Alpha Detector	A detector capable of sensing positively charged particles with the characteristics of the nucleus of a helium atom that are emitted during decay of some radioactive elements.
Alpha Particles (a)	Positively charged particles with characteristics of the nucleus of a helium atom emitted during radioactive decay of some elements.
Assessment	Evaluation and interpretation of information to develop a basis for making decisions; for example, an evaluation of radiometric data that may include dose estimates and recommendations for protective actions to minimize harmful effects from radiation.
Background Radiation[1]	Radiation from naturally occurring radioactive materials, cosmic sources, global fallout from atmospheric testing of nuclear weapons, radon and progeny at existing levels existing in buildings or the environment and consumer products containing nominal amounts of radioactive material or producing nominal amounts of radiation.
Beta Particles (ß)	Negatively charged particles emitted from the nuclei of atoms during radioactive decay with an electric charge of -1.60210×10^{-19} C and a rest mass of 9.1091×10^{-31} kg.

[1] Borders, R. J. *Dictionary of Health Physics & Nuclear Sciences Terms*. Hebron CT, RSA Publications: 1991.
[2] 10 CFR 835, *Occupational Radiation Protection*.

Celsius	A temperature system based on a 0-degree freezing point and a 100-degree boiling point for water.
Contamination	A condition that exists when an unwanted material has spread to previously unaffected areas at levels that my be harmful to public health and the environment or interfere with various measurements.
Controlled Area[1]	Any area managed by or for DOE where access is managed to protect individuals from exposure to radiation and radioactive material.
Critical	A state of fissile material when the fission neutron production rate exactly equals the rate at which neutrons are lost so that the number of neutrons remains constant and a chain reaction can be sustained. The degree of criticality is estimated by the ratio between the mass of active material that is present in the system and the critical mass under identical physical conditions.
Cubitainer	A capped, collapsible polyethylene bottle having a volume of approximately one cubic foot used to transport liquid samples; for example, urine, milk and water.
Decay Product	A radioactive or stable radionuclide that results from radioactive disintegration.
Decay Rate	Characteristic rate that an atom is spontaneous transformed into a different nuclide accompanied by emission of alpha or beta particles, or gamma rays from the atom's nucleus.
Decontamination	Removal or reduction of unwanted material from a place, media or person.
Deposition	The accumulation of (radioactive) material on unprotected surfaces of plants, structures, soil, or the bottom of ponds, streams, etc., from airborne release(s).
Dose[1]	Synonymous with Absorbed Dose. Energy absorbed by matter from ionizing radiation per unit mass at the location of interest in a material. Units are rad (S.I. units are Gray; 1 Gy = 100 rad).
Dose Rate	Amount of energy absorbed from ionizing radiation by a mass at the location of interest in a material per unit time.
Dosimeter	An instrument for measuring the accumulated or total dose from exposure to ionizing radiation.

Duplicate Sample	A sample with approximately the same mass, volume and material consistency as the initial sample.
Emergency Dose Limit	A temporary dose limit above the projected absorbed dose that will result in potential health risks to exposed individuals. These emergency dose limits are used during radiological emergencies.
Emergency Operations Center (EOC)	The center from which emergency response personnel and teams receive field instructions and directions during emergency situations. Emergency Operations Centers are usually staffed and operated by state and local personnel.
Emergency Operations Facility (EOF)	A licensee-controlled and operated support center for management of emergency response, coordination of radiological and environmental assessments, development of recommended public protective actions, and coordination of emergency response with Federal, state, and local agencies.
Emergency Planning Zone (EPZ)	A predefined area surrounding a nuclear facility used to facilitate emergency planning. Boundaries generally depend on projected internal exposure rates from ingestion and inhalation of contaminants. In relation to emergency response, an EPZ is an area where existing emergency response plans are implemented to assure that prompt and effective actions can be taken to protect the public.
Emergency Response Level	The concentration of radionuclides in agricultural products, milk, or water which if ingested would result in a projected dose commitment equivalent to an emergency Protective Action Guide (PAG).
Evacuation	The process of removing people from a hazardous area to a safe area. As used here, evacuation refers to removal of a population for a short period (not more than a few days), and relocation refers to removal for longer periods.
Exposure	A measure of the ionization induced in air by X-ray or gamma radiation. The unit of exposure is the Roentgen.
External Dosimetry[1]	A measure of that portion of the dose equivalent received from radiation sources located outside the body.
Federal (organizations)	Agencies, departments, or other entities of the Federal government.
Federal Radiological Emergency Response Plan (FRERP)	A comprehensive, conceptualized multi-agency plan for coordinating local, tribal, and Federal government response to radiological emergencies that describes roles and responsibilities of participating Federal agencies.

Federal Radiological Monitoring and Assessment Center (FRMAC)	A center in the vicinity of a radiological incident that coordinates the Federal radiological monitoring and assessment in response to an incident that threatens the health or well being of affected populations. The center, which operates at offsite locations in the affected state(s) or tribal area(s), does not generally need to be located near the emergency operations centers (EOC), as long as operations involving the lead Federal Agency (LFA), FRMAC and local entities can be coordinated. The LFA has overall responsibility for coordination and/or operation of the incident.
Federal Radiological Preparedness Coordinating Committee (FRPCC)	An organization that includes representatives from the Federal Emergency Management Agency (Committee Chair), U.S. Nuclear Regulatory Commission, U.S. Environmental Protection Agency, U.S. Department of Health and Human Services, U.S. Department of Energy (DOE), U.S. Department of Transportation, U.S. Department of Defense (DOD), U.S. Department of Agriculture, U.S. Department of Commerce, U.S. Department of State, U.S. Department of Housing and Urban Development, National Aeronautics and Space Administration, and where appropriate and other Federal departments and agencies on an ad hoc basis where appropriate.
Field Monitoring	Periodic or continuous measurement of the amount of an analyte, contaminant or the intensity of a radiation field at one or more locations in an area and analysis of results to identify hazards or potential health effects.
Gamma Exposure Rate Boundary	Boundary of the area for evacuation to minimize radiation exposures from a plume of airborne contaminants.
Gamma Rays (?)	Short wavelength electromagnetic radiation emitted from the nucleus of an atom during radioactive decay with wavelengths ranging from about 10^{-8} to 10^{-11} cm and energies that range from 10 keV to 9 MeV.
Gamma Spectrometry	Simultaneous measurement of the intensity of gamma radiation emitted at different energies emitted during radioactive decay of various mixtures containing radionuclides.
Geiger-Mueller Counter (GM counter)	A radiation detector that uses the bias voltage across a gas-filled chamber to drive an ion current triggered by a primary ionizing event. The charge collection is independent of the number of primary ions produced during absorption of radiation; rather the charge collection is a function of the bias voltage and avalanche current.
Grab Sample	A single, randomly selected sample that represents the composition at the particular instant in time where the material is obtained.

Grain	Kernels of wheat, corn, etc., used for human consumption or livestock feed.
Green Chop	Grass, legumes, or plants that are chopped and fed green to livestock.
Ground Level Plume Boundary	The point where radiation levels are approximately five times normal background levels.
Ground Shine	Radiation from material deposited on the ground.
Half-Life	Time required for the activity of a radioactive element to decrease to one-half of the initial radioactivity.
Hay	Any grass, legume, or plant that has been cured or dried for use as feed for livestock.
High Radiation Field[1]	Any area, accessible to individuals, in which radiation levels could result in an individual receiving a deep dose equivalent in excess of 0.1 rem (0.001 Sv) in 1 hour at 30 cm from the radiation source or from any surface that the radiation penetrates.
Hydrological Monitoring	Periodic or continuous measurement of the amount of an analyte or contaminant in surface or groundwater at one or more locations in an area and analysis of results to identify hazards or potential health effects.

Incident Phase Incidents (or emergencies) are divided into three phases (a) an early phase, (b) an intermediate phase, and (c) a late phase.

(a) **Early phase** - The time interval at the beginning of a nuclear incident when immediate decisions based primarily on predictions of radiological conditions in the environment are necessary for effective use of protective actions. The early phase may last from hours to days. The early phase is assumed to last four days for the purpose of dose projection.

(b) **Intermediate phase** - The time interval beginning after sources and releases have been brought under control and reliable environmental measurements are available for use as a basis for decisions on additional protective actions. This phase continues until protective actions are terminated. This phase may overlap the early and late phases and may last from weeks to many months. The intermediate phase is assumed to last for one year for the purpose of dose projections.

(c) **Late phase** - The time interval that begins when recovery actions, designed to reduce radiation levels in the environment to permanently acceptable levels begin. This phase ends when recovery actions have been completed. The late phase (or recovery phase) may extend from months to years.

Ingestion Exposure Pathway Internal dose attributable to consumption of contaminated water and food such as milk or fresh vegetables.

Inhalation Dose Internal dose attributable to inhalation of radioactive material from a plume or resuspended contamination.

Interdiction An action to prevent use of contaminated areas and agricultural products from these areas to minimize risks to public health.

Ionization Chamber An instrument that provides a measure of the ionizing radiation intensity by collecting charged ions generated by the interaction of the radiation that interacts with the gas in a sealed chamber. Charge associated with ions formed under the influence of an imposed EMF and collected at the anode and cathode of the chamber.

Irradiation Exposure to ionizing radiation.

Isopleth A line on a map or chart connecting points of equal concentration, dose, or dose rate.

Isotopes	Forms of the same element having nearly identical chemical properties but differing in their atomic masses. A radioisotope is an unstable isotope of an element that decays or disintegrates spontaneously, emitting radiation.
Joint Nuclear Accident Coordination Center (JNACC)	A joint DOE/DOD capability that maintains current information on the location of specialized DOE and DOD teams capable of providing nuclear weapons accident assistance. The DOE and DOD elements of JNACC are also responsible for initiating actions to deploy response teams in the event of a significant nuclear weapon accident.
Lead Federal Agency (LFA)	The Federal agency that owns, authorizes, regulates, or is otherwise responsible for managing deployment of personnel and response to an emergency with the authority to take whatever action is necessary to stabilize the situation.
Local (organization)	The local government agency or office having the principal or lead role in emergency planning and preparedness. Generally this will be a county government. Other local government entities; *e.g.*, towns, cities, municipalities, tribes, etc., are considered to be sub organizations with supportive roles to the principal or lead local government organization responsible for emergency planning and preparedness. In some cases, there will be more than one lead organization at the local level. One designated lead organization is preferable.
Monitoring	Continuing collection of data to assess information, determine adequacy of radiation protection practices and to identify potentially significant changes in conditions or radiation protection.
Net Control	An entity of Monitoring Division Operations that regulates radio traffic, and coordinates communications between the Monitoring Division and field personnel.
Neutron (n)	An electrically neutral subatomic particle having a mass 1.67495×10^{-27} kg and a mean life of 1000 s, which is stable when bound in an atomic nucleus.
Noble Gas	Chemically inert gases including radioactive isotopes.
Nuclear Power Plant	Any device, machine, or assembly that converts nuclear energy into some form of useful power, such as mechanical or electrical power. In a nuclear electric power plant, heat produced by a reactor is generally used to make steam to drive a turbine that in turn drives an electric generator.

Nuclear Reactor	A system in which a fission chain reaction can be initiated, maintained, and controlled. Essential components include a core and fissionable fuel. Other components include a moderator, shielding, coolant, and control mechanisms.
Offsite	The area outside the boundary of a site or facility but within the area of influence.
Offsite Federal Support	The Federal role assisting during mitigation of offsite consequences during an emergency and protection of public health and safety, including assistance identifying and implementing measures to protect public health.
Onsite	Area within the boundary of a site or facility established by the owner or operator, a transporter or the LFA of the affected facility for administrative control during an emergency. Specifically, the onsite area includes everything within the boundary of a nuclear power plant, a DOD installation, a DOE facility, a National Defense Area, or a National Security Area. It also includes the controlled area surrounding a radioactive spill in a transportation incident.
Onsite Federal Support	Assistance by a Federal agency that owns, authorizes, regulates, or is otherwise responsible for the radiological facility, material being transported, etc.; for example, the LFA. Federal support is in response to state and local assistance efforts and supports the owner or operator's efforts to manage and thereby prevent or minimize offsite consequences during an incident.
Owner or Operator	Party responsible for a nuclear facility or vehicle used to transport radioactive material. The owner or operator may be a Federal agency, a state or local government, or a private business.
Plume	• A visible or measurable discharge of a contaminant from a given point of origin, which may include discolored or thermal water, particulates in air, among others; for example, a plume of smoke. • Airborne radiation leaking from a damaged reactor. • Downwind area where a release could pose a health risk to those exposed to contaminants.
Plume Exposure Pathway	The principal mechanisms for exposure in a plume including whole body external exposure to gamma radiation, inhalation and ingestion.
Potable Water	Water that is suitable for human consumption.

Precipitation Collector	A device to collect precipitation including rain, sleet, and snow. Precipitation is usually collected in a large metal funnel or a plastic sheet suspended on a frame in a pre-established open area.
Preventive PAG – Ingestion Exposure Pathway	Protective action guides intended to maintain the committed effective dose equivalent (CEDE) at levels such that the projected dose equivalent to the thyroid, bone marrow and other internal organs is 1.5 rem or less and whole body exposure is less than 0.5 rem.
Preventive Response Level	Concentration of a radionuclide in food, milk, or water that if ingested would result in a CEDE equivalent to the PAG.
Projected Dose	An estimate of the radiation dose that affected individuals could potentially receive unless protective actions are implemented.
Protective Action	An action taken to avoid or reduce exposure from consumption of food or water contaminated with radioactive materials.
Protective Action Guide (PAG)	The projected dose to an individual from an unplanned release of radioactive material at which a specific protective action to reduce or avoid that dose is recommended.
Protective Clothing	Clothing worn by a radiation worker to prevent contamination of the body or personal clothing.
Public Affairs Officer (PAO)	Representative from a Federal Agency, who works in cooperation with other Federal, State, and local agencies, to coordinate public releases of information during an event.
Rad[1]	Unit of absorbed dose equal to 100 ergs per gram or 0.01 joule per kilogram (0.01 Gy).
Radiation[1]	Alpha particles, beta particles, gamma rays, x-rays, neutrons, high-speed electrons, high-speed protons, and other ionizing particles.
Radiation Emergency Assistance Center/ Training Site (REAC/TS)	A multi-purpose medical/training facility located at Oak Ridge, Tennessee that can provide medical care for all types of radiological injuries, assist during radiological emergencies and provide medical and health physics advice and training.
Radioactive Decay	Disintegration of the nucleus of an unstable nuclide by spontaneous emission of alpha or beta particles, photons, neutrons, etc.
Radioactivity	The spontaneous emission of particulate and/or electromagnetic radiation either from unstable atomic nuclei or as the result of a nuclear reaction.

Radio Assay	Analysis of any substance to determine the quantity and type of radioactive isotopes that are present; for example in food, soil, and other matrices.
Radioiodines	Radioactive nuclides of iodine.
Radiological Assistance Program (RAP) Team	A team dispatched to the site of a radiological incident by the responding regional DOE office.
Radiological Emergency	An incident involving environmental releases of radioactive material that poses an actual or potential hazard to public health and safety.
Radionuclide	Natural or man-made radioactive element having an atomic number characteristic of the number of protons but with an atomic mass that depends on the number of neutrons characteristic of a specific nuclide.
Reentry	Temporary entry into a restricted zone under controlled conditions.
Release	Controlled or uncontrolled escape of radioactive or other contaminants into the environment.
Rem	Unit of dose equivalent. The dose equivalent (rem) is equal to the absorbed dose in rad multiplied by a quality factor, distribution factor and any other necessary modifying factor(s) (1 rem = 0.01 Sv)
Replicate Sample	Samples collected in the same way and at the same time as original samples from each location. Analytical methods and analytes are identical for original and replicate samples.
Restricted Area	Any area where access is limited and controlled by the owner, operator or employer to protect individuals from exposure to radiation or radioactive materials.
Resuspension	Reintroduction of surface particulates into air by the wind.
Return	Reoccupation of areas cleared for unrestricted residence or use.
Roentgen (R)[3]	The quantity of X- or gamma-radiation such that the associated emission per 0.001293 g of air produces, in air, ions carrying 1 esu of electricity of either sign.
Sampling Head	The device installed on an air sampler that holds the filter through which the sampled air passes.
Shelter	A structure or other location offering shielding from nuclear radiation in the environment.

[3] International Congress of Radiology 1937

Shielding	Any material or barrier that absorbs or attenuates radiation.
Source Term	The quantity of radioactive material released to the environment usually described as the activity per unit time. Source terms should be characterized by chemical and physical properties of specific radionuclides.
State (organization)	The state government agency or office having the principal or lead role in emergency planning and preparedness. There may be more than one state involved, resulting in separate application of evaluation criteria for the affected states. To the extent possible, however, one state should be designated as the lead.
Static Water Level	The elevation or level of the water table in a well when pumps are not operating.
Station Number	A unique number assigned to each sample, measurement or monitoring location to identify the site.
Survey Meter	Hand-held, portable instruments used to measure radionuclide concentrations or dose and exposure rates.
Team Captain	A person assigned by the Monitoring Division Manager as the primary contact (liaison) between the Manager or designates and other field personnel.
TLD Deployment	Process of placing environmental thermal luminescent dosimeters (TLDs) at fixed locations. These locations shall be readily identifiable and easily accessible. Site characteristics and locations should be well documented (including GPS readings).
TLD Retrieval	Process of recovering TLDs from fixed locations after a predetermined length of time.
Transit Control	A TLD used to measure exposure while deploying or retrieving other TLDs.
Tritium	A radioactive isotope of hydrogen with an atomic mass of 3 and a half-life of 12.5 y.
Turn-back Level	A predetermined radioactivity level at which monitoring activities cease and monitoring personnel are withdrawn from an area.
Whole-body Counter	A device used to identify and measure radiation in the body (body burden) of human beings and animals. A heavy shield is generally used to minimize effects from background radiation measured by ultra-sensitive detectors and electronic equipment.

Whole-body Dose[4] An absorbed dose or dose equivalent from penetrating radiation when the magnitude of the absorbed dose (or dose equivalent) is essentially uniform over the whole body.

[4] NCRP 94 1987

REFERENCES

Amersham Corporation. 1991. *1991 Catalog.* Life Science Products, Arlington Heights, Il.

U.S. Department of Health, Education, and Welfare. 1970. *Radiological Health Handbook*. Rockville, MA.

Dodd, B. and L.L. Humphries. 1988. "Hazards Assessment of Worst Case Transportation Accidents Involving Typical Radioactive Material Shipments." *Health Physics Society Journal*, Vol. 55, No. 6.

Humphries, L.L. and B. Dodd. 1989. "Risks of Radioactive Material Transportation Accidents in Oregon." *Health Physics Society Journal*, Vol. 57, No. 1.

ICN Biomedicals, Inc. 1991. *Research Product Catalog: 1990-1991*. Costa Mesa, California.

International Commission on Radiological Protection. 1977. *Handling, Storage, Use, and Disposal of Unsealed Radionuclides in Hospitals and Medical Research Establishments.* ICRP Publication 25. Pergamon Press, New York, NY.

International Commission on Radiological Protection. 1983. *Radionuclide Transformations – Energy and Intensity of Emissions*. ICRP Publication 38. Pergamon Press, New York, NY.

Kocher, D.C. 1981. *Radioactive Decay Data Tables (Version 4).* Report DOE/TIC-11026. Technical Information Center, U.S. Department of Energy, Washington, D.C.

National Council on Radiation Protection and Measurements. 1982. *Nuclear Medicine – Factors Influencing the Choice and Use of Radionuclides in Diagnosis and Therapy*. NCRP Report No. 70. Washington, D.C.

National Council on Radiation Protection and Measurements. 1989a. *Exposure of the U.S. Population from Diagnostic Medical Radiation*. NCRP Report No. 105. Washington, D.C.

National Council on Radiation Protection and Measurements. 1989b. *Radiation Protection for Medical and Allied Health Personnel*. NCRP Report No. 105. Washington, D.C.

NEN/DuPont Company. 1991. NEN Research Products. *1990/1991 Catalog*. Boston, MA.

Stabin, M. and A. Schlafke-Stelson. 1991. "List of Nuclear Medicine Radionuclides and Potential Contaminants for Operators of In-vivo Counters." *Health Physics Society Journal*, Vol. 61, No. 3, pp. 427–430.

U.S. Environmental Protection Agency. 1991. *Standard Operating Procedure for Compressed Noble Gas Sampler*. SOP Number NRO-5.03. Environmental Monitoring Systems Laboratory, Nuclear Radiation AD, Field Monitoring Branch.

U.S. Environmental Protection Agency. 2000. *Long-Term Hydrological Monitoring Program*, CER-203. Center for Environmental Restoration, Monitoring, and Emergency Response, Las Vegas, NV

This page intentionally left blank

Appendix A FORMS AND CHECKLISTS

Appendix A gives detailed instructions on filling out each form. The instructions for a form are found on the page opposite the form for ease of use.

Form Name	Instructions (Page #)	Sample Form (Page #)
• *Daily Instrument QC Checks*	68	69
• *Data Acquisition Log*	70	71
• *Field Monitoring Log*	72	73
• *Sample Control Form*	74	75
• *Team, Instrument, & Equipment Information Log*	76	77
• *Local Area Monitoring (LAM) TLDs*	78	79

DAILY INSTRUMENT QC CHECKS

The Daily Instrument QC Checks form is used to record quality control information for each instrument at the beginning and end of every shift.

Event	Write name of event.
Team #	Write team number / name.
Instrument Number	Write instrument number from Deployment Data System sticker, property number, serial number, or other organizational identifying numbers.
Instrument Type	Write instrument type.
Depart Date/Time	Record departure date following example below. Record departure time using military notation, as below. Example: 02 Sep 1997 1745
QC Check Source Type	Write the type of check source used (Am-241, BKG, Pu-238, etc.).
Check Source ID #	Include number of check source, if available.
Check Source Activity	Record activity of source and units. If instrument has different scales, record scale used.
Acceptable Operating Range	Write acceptable range of operation.
Depart Actual Reading	Record actual meter reading (Reading x Scale) at time of departure.
Return Date/Time	Record return date and time following example above.
Return Actual Reading	Record actual meter reading (Reading x Scale) on return.

DAILY INSTRUMENT QC CHECKS

Event _____ Team # _____

Performed by _____ Reviewed By _____ Page_____ of ____

Instrument Number	Instrument Type	Depart Date/Time	QC Check Source Type	Check Source ID#	Check Source Activity	Acceptable Operating Range	Depart Actual Reading	Return Date/Time	Return Actual Reading
		DD MMM YYYY 0000 (military)						DD MMM YYYY 0000 (military)	
		DD MMM YYYY 0000 (military)						DD MMM YYYY 0000 (military)	
		DD MMM YYYY 0000 (military)						DD MMM YYYY 0000 (military)	
		DD MMM YYYY 0000 (military)						DD MMM YYYY 0000 (military)	
		DD MMM YYYY 0000 (military)						DD MMM YYYY 0000 (military)	
		DD MMM YYYY 0000 (military)						DD MMM YYYY 0000 (military)	
		DD MMM YYYY 0000 (military)						DD MMM YYYY 0000 (military)	
		DD MMM YYYY 0000 (military)						DD MMM YYYY 0000 (military)	
		DD MMM YYYY 0000 (military)						DD MMM YYYY 0000 (military)	
		DD MMM YYYY 0000 (military)						DD MMM YYYY 0000 (military)	
		DD MMM YYYY 0000 (military)						DD MMM YYYY 0000 (military)	
		DD MMM YYYY 0000 (military)						DD MMM YYYY 0000 (military)	
		DD MMM YYYY 0000 (military)						DD MMM YYYY 0000 (military)	

Revision Date – June 2001

DATA ACQUISITION LOG

The *Data Acquisition Log* is used by the Data Acquisition Officer to record field monitoring data reported by Field Monitoring Teams.

> **NOTE**
> Columns on *Data Acquisition Log* correspond to those on *Field Monitoring Log*. Therefore, report data in order recorded on *Field Monitoring Log*.

Entry #	Enter numbers 1 through 11 (or other appropriate last number) to identify separate entries.
(1) Team #	Number, letter, or name identifying the Field Monitoring Team reporting data.
(2) Time of Day	In military time. (Time zone is always the FRMAC location time.)
(3) Location	Description of survey site; i.e., street address, town, intersection, highway, sector, distance, if applicable.
(4) Latitude	In degrees, and decimal degrees.
(5) Longitude	In degrees, and decimal degrees.
(6) Instrument ID	Deployment Data System, property number, serial number, or other organizational instrument identifying number.
(7) Measurement	Reported reading.
(8) Units	Units in which instrument reads.
(9) Radiation Type/Energy	Used primarily by the Accident Response Group program. For FRMAC purposes, use descriptive comments such as alpha, beta, gamma, neutron, Pu (plutonium), Am (americium), etc.
(10) Measurement Surface	Examples: grass, soil, filter, etc.
(11) Remarks	Any factors pertinent to instrument measurements, and any other environmental conditions.

DATA ACQUISITION LOG

Date _____ Page _____ of _____

Event _____

Data Acquisition Officer _____

Data Entry Operator _____ Review By _____

Entry #	Team # (1)	Time (military) (2)	Location Description (3)	Latitude (4)	Longitude (5)	Inst ID (6)	Measurement (7)	Units (8)	Radiation Type/Energy (9)	Measurement Surface (10)	Remarks If samples are collected at this site; Note Sample ID and type here (11)

Original to Data Center Copy to Field Monitoring Revision Date – June 2001

FIELD MONITORING LOG

The *Field Monitoring Log* is used by Field Monitoring Teams to record field monitoring data and sample collection by sample number.

Before leaving FRMAC, complete **Team Number (1)**, **Monitors' Names**, and **Date**.

(1)	**Team #**	Number, letter, or name identifying the Field Monitoring Team reporting the data.
(2)	**Time of Measurement**	Military time. (Time zone is always the FRMAC location time.)
(3)	**Location**	Survey location; *i.e.*, street address, town, intersection, highway, farm, sector, distance, if applicable.
(4)	**Latitude**	In degrees and decimal degrees.
(5)	**Longitude**	In degrees and decimal degrees.
(6)	**Instrument ID**	Deployment Data System, property number, serial number, or other organizational instrument identifying number.
(7)	**Measurement**	Actual or corrected instrument reading.
(8)	**Units**	Units in which instrument reads.
(9)	**Radiation Type/Energy**	Used primarily by the ARG program. For FRMAC purposes, use descriptive comments such as alpha, beta, gamma, neutron, Pu (plutonium), Am (americium), etc.
(10)	**Measurement Surface**	Examples: filter, soil, grass, etc.
(11)	**Remarks**	Any factors pertinent to instrument measurements and any other environmental conditions.

NOTE: A *Field Monitoring Log* entry is completed for each measurement taken.

FIELD MONITORING LOG

(1) Team Number:_____ Date (MM/DD/YY):_____

Monitor's Names: _____ Reviewed By:_____

Instr ID:	Instrument and Probe Model & Type:	Entry & Exit QC checks:_____(Initial on return) QC Check Logbook Page #: _____
Instr ID:	Instrument and Probe Model & Type:	Entry & Exit QC checks:_____(Initial on return) QC Check Logbook Page #: _____
Instr ID:	Instrument and Probe Model & Type:	Entry & Exit QC checks: _____(Initial on return) QC Check Logbook Page #: _____

GPS Information (if used)
Instrument ID: _____
Manufacturer/Model: _____
Deployment Site QA/QC check:
Site: _____
Lat:_____ Long: _____

Remarks
Include ALL pertinent measurement factors.
Environmental: Ground Conditions, mist, rain, etc.
If samples are collected at this site; Note Sample ID and type here **(11)**.

	Time (Military) (2)	Location Description (Location/Flag ID if used) Attach map/drawing if necc. (3)	Latitude (4)	Longitude (5)	Inst ID (6)	Measurement (7)	Units (8)	Radiation Type/Energy (9)	Measurement Surface (10)	Remarks
(A)										
(B)										
(C)										
(D)										
(E)										
(F)										
(G)										
(H)										
(I)										

Original to Data Center Copy to Field Monitoring Revision Date – June 2001

SAMPLE CONTROL FORM

Field	Data
Sample Control Number	If no Barcode of Sample Control Number then create one
Collection Team ID	Enter Team Name or Number
Collector's Name	Enter Collectors Name
Org	Enter Collectors Home Organization
Location	Enter Location either GPS-Longitude/Latitude, Description (*i.e*., Address, Mile Marker, Sector, Distance). If using flags, add Geolocation ID. The recommended format is degrees and decimal degrees. *(i.e*., Longitude = W 108°.27976).
Collection Date	Enter the Date the Sample was Collected (dd-mmm-yyyy)
Collection Time	Enter the Time the Sample was Collected (Military)
# of Containers	If more than one sample container is collected enter the number
Screening Value	If background permits, enter the Radiation Level with units
Remarks	Enter any pertinent information not already entered (i.e. Grab/Composite Sample, Multiple Analysis Required)
Sample Type	Check the appropriate Sample Type. Enter all available information.
Air Sample	Enter Air Sampler Type, Filter Size and Type, Date On & Off (dd-mmm-yyyy), Time On & Off (Military). Enter either Start & Stop Flow Rate (Corrected) or Total Volume.
Milk Sample	Check Type of Milk Sampled, if Other describe in the remarks. Enter feed type the cattle eat, if Other, describe in the remarks.Enter Milking Date (dd-mmm-yyyy) & Time (Military)
Soil Sample	Enter Depth of soil sample in cm and/or Dimensions of sample area give units. Check if Vegetation Sample was collected with soil sample. If yes enter Vegetation Sample Control Number.
Water Sample	Check Water Sample Collection Area, if Other, describe in the remarks.
Other	Check Other Sample Type, and Enter description of sample and size or volume of sample (i.e. Vegetation 1-gal sealable bags grass, Swipe 100 cm^2)
Processing Priority	Identify Rush Samples. Add Rush labels to sample bags
Split # / Dup #	If Samples are to be split, create duplicate paperwork and assign a new sample number to the dup or split.
Screening Value	Samples are screened for activity as they pass through Sample Receiving. The type of screening depends on the nature of the incident (*i.e*. Nuclear weapon's accident screening conducted with Violinist or FIDLERs). Be sure to note reading and units.
Forms and Sample bags checked for contamination	Check exterior of sample bags and forms for contamination. This can be done with a large area wipe check in the field with a survey instrument. These should be reserved at the hot line.
Sample Preparation Required	Indicate whether the sample must be prepared before being forwarded to the laboratory.
Sample Remarks	Enter discrepancies not resolved during sample receipt.
Analyses Requested	Identify the analyses requested per the Monitoring Plan.
Laboratory Assignment	Enter the laboratories receiving the sample.
Special instructions	Enter any special instructions (*i.e*., homogenize sample)
Relinquished by	Signed by person releasing custody of the sample - must be done to a person or secured area
Date	Date relinquished
Time	Time (military) relinquished
Received by	Signed by the person receiving the sample - if relinquished to a secure area, the relinquisher must enter the secure location to which the sample is relinquished
Date	Date received or relinquished to a secure area
Time	Time (military) received or relinquished to a secure area

SAMPLE CONTROL FORM & CHAIN OF CUSTODY

"Sample Control Barcode"

Sampling Information (*to be filled out by the Field Team*)

Collection Team ID: Collector's Name: Org:

Location: ❑ GPS Latitude_____ Description: _____

Longitude _____

Collection Date: Collection Time (Military): # of Containers: Contact Dose Rate:

Remarks:

Sample Type (use only one)

Air	Sampler ID#: Type: Filter Size & Type:
	Date ON: (DD/MM/YYYY) Time ON: (Military) Date OFF: (DD/MM/YYYY) OFF: (Military)
	Start Flow: Stop Flow: **OR** Total Volume: *Unit:*
Milk	❑ Cow ❑ Goat ❑ Other: ❑ Stored Feed ❑ Pasture ❑ Other:
	Milking Date: Milking Time: Number of Animals sampled:
Ground	Depth of soil sample: cm Vegetation collected with soil samples? ❑ **Yes** ❑ **No**
	Sample surface area: If vegitation in separate container, provide sample #:
Water	❑ Surface ❑ Ground / Well ❑ Potable / Tap ❑ Other:
Other	❑ Vegetation ❑ Feed ❑ Produce ❑ Swipe ❑ Other:
	Describe:

Sample Receiving (*to be filled out by sample receiving technician*)

Processing Priority: Dup Sample #: Split Sample #:

Screening Value: ❑ **Contamination Check:** Forms and sample bags surveyed.

Sample Remarks:

Analysis Requested: ❑ **Sample Preparation Required**, send to sample preparation area before laboratory.

Laboratory Assignment:

Special instructions:

Custody Transfer (Signatures)

Relinquished by:	Date	Time	Received by:	Date	Time
Relinquished by:	Date	Time	Received by:	Date	Time
Relinquished by:	Date	Time	Received by:	Date	Time
Relinquished by:	Date	Time	Received by:	Date	Time

Revision Date - March 2002

Original with Sample **Copy to Data Center** **Copy to Courier**

TEAM, INSTRUMENT, & EQUIPMENT INFORMATION LOG

The *Team, Instrument, & Equipment Information Log* is completed and submitted to the Field Monitoring Supervisor before leaving the FRMAC.

Top portion	Complete with team member information.
Bottom portion	Complete with instrument and equipment information, including license information of vehicle(s).

TEAM, INSTRUMENT, & EQUIPMENT INFORMATION LOG

Field Team Supervisor Initials _____

Team Number:			
Today's Date:		Start Time:	
Team Leader (Last, first M.I.):			
Team Leader Organization:			

TEAM MEMBERS

	Name (Last, First, M.I.)	Organization
1		
2		
3		
4		
5		

INSTRUMENT AND EQUIPMENT INFORMATION

Instrument/Equipment Number	Instrument/Equipment Type	Instrument/Equipment Number	Instrument/Equipment Type

Cellular Phone		Radio Number
Serial Number	Phone Number	
	( ) -	

VEHICLE INFORMATION

License Plate Number	State	License Plate Number	State

Revision Date – March 2002

This form must be completed and turned in to the Field Team Supervisor prior to field deployment

Original to Data Center **Yellow copy to Field Monitoring Division**

LOCAL AREA MONITORING (LAM) TLDS

The *Local Area Monitoring (LAM) TLDs* form is used to record information on the deployment and retrieval of environmental TLDs, called LAMs.
Top portion - Enter information when LAMs are deployed and again when they are retrieved.

Under **Station** record:
#-The number of the station / location.
Description - Location information.
Latitude and Longitude - Latitude and longitude of the station (routinely in degrees and decimal degrees).

Under **TLDs**, record:
Number 1 Record the number of one of the LAMs.
Number 2 Record the number of the other LAM.
Deployed and Retrieved
Date and initial when the LAMs are deployed.
Date and initial when the LAMs are retrieved.

Under **Remarks**, include:
Any additional, pertinent information.
Chain of Custody - To be signed when relinquishing LAMs.

LOCAL AREA MONITORING (LAM) TLDs

STATION				TLDs				Remarks
						Deployed	Retrieved	
#	Description	Latitude	Longitude	Number 1	Number 2	Date/Time Initials	Date/Time Initials	

CHAIN OF CUSTODY			DATE
Relinquished By:	Received By:		
Relinquished By:	Received By		
Deployment Transit Control TLD Numbers	1)	2)	
Retrieval Transit Control TLD Numbers	1)	2)	
For Laboratory Use Only			
FRMAC-to-Laboratory Transit Control TLD Numbers			

Revision Date – March 2002

Original to Data Center **Yellow Copy to Field Monitoring** **Pink Copy to Laboratory**

This page intentionally left blank

Appendix B IMPLEMENTING AND OPERATING FRMAC RADIO NET CONTROL

Net Control is the responsibility of the Monitoring Division (MD) of the FRMAC. Implementation of radio operations is under the direction of the MD Field Monitoring Supervisor.

OPERATIONS

Radio operations go into effect when the FRMAC responds to a radiological emergency. The primary function of Net Control is to ensure that all urgent traffic is transmitted quickly and that data and instructions are relayed to Field Monitoring Teams in a timely manner.

Under instructions from the Field Monitoring Supervisor, Net Control relays information to designated Field Monitoring Teams that perform their duties as instructed. Field monitoring data are transmitted to Net Control. The data information is received and transcribed by the Data Acquisition Officer, who subsequently turns it over to the Field Data Specialist for verification of completeness and accuracy. The data are then copied and distributed throughout the FRMAC.

PROCEDURE

1. Field Monitoring Supervisor gives Net Control the yellow copy of each *Team, Instrument & Equipment Information* form.
2. Field Monitoring Teams initiate a radio check before deployment to designated sampling sites.
3. Net Control acknowledges radio communication to each team.
4. Net Control records all incoming and outgoing transmissions on a *Data Acquisitions Log* form. This form is kept on a daily basis for the duration of the exercise/emergency.
5. Teams proceed to the sites. Upon arrival, teams identify themselves and their locations to Net Control.
6. When spelling, teams use the phonetic alphabet shown on the next page.
7. When communicating with Net Control, 10-Codes, listed on the next page, can be used.
8. After teams record data on the *Field Monitoring Log*, the team member designated as Net Contact transmits the data to Net Control.
9. If Net Control instructs a team to **stand by,** the team will be contacted by Net Control as soon as possible.

   During peak periods of data transmission, several teams may have readings to relay. When this occurs, teams are stacked; i.e., placed in sequence of original transmission. The Field Monitoring Supervisor may override this sequence as dictated by circumstances or emergencies.

NOTE

It is important that teams exercise a modicum of forbearance and not make unnecessary transmissions that block normal traffic flow.

10. Returning teams are required to notify Net Control when they arrive at the Sample Receiving Line. This information is then transmitted to the Status Display Coordinator for map display purposes.

11. Net Control will maintain radio contact until all teams have arrived at the Sample Control Receiving Line.

PHONETIC ALPHABET

A	Alpha	N	November
B	Bravo	O	Oscar
C	Charlie	P	Papa
D	Delta	Q	Quebec
E	Echo	R	Romeo
F	Foxtrot	S	Sierra
G	Golf	T	Tango
H	Hotel	U	Uniform
I	India	V	Victor
J	Juliet	W	Whiskey
K	Kilo	X	X ray
L	Lima	Y	Yankee
M	Mike	Z	Zulu

10-CODES

10-1	transmission garbled, unreadable
10-2	transmission loud and clear
10-4	affirmative, yes
10-7	out of service
10-8	in service
10-9	please repeat transmission
10-19	return to base
10-20	location
10-21	phone call to Net Control

DISTRIBUTION

NNSA/HQ
A.W. Arkin (1)
T.M. Black (1)
P. Evancoe (1)
B. Greer (1)
K. Ringley (1)
D. Wilber (1)
T. Wilber (1)

NNSA/AL
J.D. Stickney (1)

NNSA/NV
T. Cooper (1)
D.M. Daigler (1)
D.D. Monette (1)
C.T. O'Laughlin (1)
R. Phifer (1)

DOE RAP Regions
Region 1 (6)
Region 2 (6)
Region 3 (6)
Region 4 (6)
Region 5 (6)
Region 6 (6)
Region 7 (6)
Region 8 (6)

BN
D.R. Bowman (1)
R.C. Hopkins (1)
K.R. Lamison (1)
E.C. Nielsen (1)
C.A. Riland (1)
C.L. Rivera (1)
R.J. Tighe (1)
D.M. Van Etten (1)
R.J. Votech (5)
A.J. Will (1)

CDC
D. Farrow-Collier (1)
E.K. Gray (1)

CRCPD
P. Gorman (65)

DOD/DTRA
M.W. Arnold (1)
D. Cherry (1)
A. Laubach (1)
S. Little (1)
J. Storey (1)
P. Wingate (1)

DOS
S. Goodwin (1)

DOD/JTFCS
D.C. Brown (1)
J.D. Conger (1)
P. DeFluri (1)
A. Feagin (1)
Lt.Col. C. Schiffer (1)
M.A. Wolfe (1)

EPA/HQ
M. Kruger (1)

EPA/NAREL
S.W. Poppel (1)
E.L. Sensintaffar (5)

EPA/R&IE
G.D. Dempsey (5)

EPA REGIONS
Region I J. Cherniack (1)
Region II P. Giardina (1)
Region III J. Minnick (1)
Region IV S. Richards (1)
Region V L. Jensen (1)
Region VI G. Brozowski (1)
Region VII R. Dye (1)
Region VIII R. Graham (1)
Region VIX M. Bandrowski (1)
Region X J. Leitch (1)

FBI
J. Kaysak (1)
R. William (1)

FEMA/HQ
M. Garshack (1)
N. Goldstein (1)
M. Lowder (1)

FEMA/RAC
Region I D. McElhinney (1)
Region II R. Reynolds (1)
Region III K. Koob (1)
Region IV L. Robertson (1)
Region V W. Curtis (1)
Region VI L. Earp (1)
Region VII E. Jenkins (1)
Region VIII D. Griffiths (1)
Region VIX T. Ridgeway (1)
Region X L. Moore (1)

HHS/FDA
R. Bernacki (1)
B. Collins (1)
R. Evans (1)
K. Miles (1)
D. Thompson (1)
T. Trout (1)

FRMAC Monitoring and Analysis Manual
Radiation Monitoring and Sampling, Vol. 1
DOE/NV/11718--181-VOL 1
Date of Manual: December 2002

KEYSTONE
D.J. Thome (1)

NARAC
R. Baskett (1)
J.S. Ellis (1)
J. Nasstrom (1)

NASA
R.R. Gillett (1)
R. Scott (1)
R.R. Smoker (1)

NATIONAL LABORATORIES
W.J. Flor, LANL (1)
S. Gogol, LANL (1)
J. Haynie, LANL (1)
L. Hoffman, LANL (1)
M. Howe, LANL (1)
E. Mullen, LANL (1)
R. Baxter, LLNL (1)
B. Buddemeier, LLNL (1)
R. Hadley, LLNL (1)
D. Imbro, LLNL (1)
K.L. Steinmaus, PNNL (1)

NOAA
D. Randerson (1)

NRC/HQ
J. Gunn (1)
T. McGuire (1)
M. O'Shaugnessey (1)
R.H. Wessman (1)

NRC/STATE LIAISONS ER COORDINATORS
Region I R. Bores (1)
Region I F. Hinson (1)
Region II R. Trojanowski (1)
Region II J. Hufham (1)
Region III R. Lickus (1)
Region III J. Foster (1)
Region IV W. Maier (1)
Region IV T. Andrews (1)

NV
M. Alexander (1)
S.R. Marshall (1)

REAC/TS
R.W. Ricks (3)

USDA
K. Barrett (1)
L. Thomas (1)

LIBRARIES
Public Reading Facility (1)
Technical Library (1)
OSTI (electronic copy)